Hawley Public Utilities
DER Interconnection Process

Table of Contents

1. Booklets – Anyone requesting interconnection information receives a Process Overview booklet and the appropriate Process booklet (b, c or d)
    a. Process Overview
    b. Simplified Process (under 20kW capacity)
    c. Fast Track Process (see applicability within)
    d. Study Process (see applicability within)
2. Initial Procedural Forms
    a. Pre-application Report Request
    b. Pre-application Report
    c. Simplified Interconnection Application
    d. Standard Interconnection Application (for Fast Track and Study processes)
    e. Energy Storage Application
3. Supplemental Agreement Forms
    a. Supplemental Review Offer
    b. System Impact Study Agreement
    c. Facility Study Agreement
    d. Transmission System Impact Study Agreement
4. Final Agreement Forms
    a. Uniform Contract (under 40kW capacity)
    b. Municipal Minnesota Interconnection Agreement (over 40kW or upon customer request)
    c. Certificate of Completion

Detroit Lakes Public Utility's 29.3 kW Select Solar Community Solar Garden
Detroit Lakes, MN

INTERCONNECTION PROCESS

Process Overview

ABSTRACT

Information for interconnecting all Distributed Energy Resources smaller than 10 megawatts in size to the utility distribution system.

Contents

Foreword 1

1 Key Terminology 2

1.1. Distributed Energy Resource 2

1.2. Point of Common Coupling (PCC) / Point of DER Connection (POC) 2

1.3. Capacity 2

2 Roles 2

2.1. Overview 2

2.2. DER Interconnection Coordinator 3

2.3. Interconnection Customer 3

2.4. Application Agent 3

2.5. Engineering Roles 3

3 Processes 3

3.1. Overview 3

3.2. Importance of Process Timelines 4

3.3. Simplified Process 5

3.4. Fast Track Process 5

3.5. Study Process 6

3.6. Process Assistance 6

4 Interconnection Application 6

4.1. Overview 6

4.2. Availability of Information 7

4.3. Interconnection Application Process Fees 7

4.4. Application Review Timelines 7

4.5. Comparability 8

4.6. Changing Process Queues 8

4.7. Queue Position 8

4.8. Site Control 9

5 Pre-Application Report 9

5.1. Pre-Application Report Requests 9

5.2. Information Provided 9
5.3. Pre-Application Report Components 10
6 Capacity of the Distributed Energy Resources 11
6.1. Existing DER System Expansion 11
6.2. New DER Systems 11
6.3. Limited Capacity 11
7 Modification to Interconnection Applications 12
7.1. Procedures 12
8 Interconnection Agreements 12
8.1. Timelines 12
8.2. Types of Agreements 13
9 Interconnection 13
9.1. Metering 13
9.2. Inspection, Testing and Commissioning 13
9.3. Interconnection Costs 14
9.4. Technical Requirements 14
9.5. Authorization for Parallel Operations 14
10 Extension of Timelines 15
10.1. Reasonable Efforts 15
10.2. Extensions 15
11 Disputes 15
11.1. Procedures 15
12 Clauses 15
12.1. Confidentiality 15
12.2. Non-Warranty 17
12.3. Indemnification 17
12.4. Limitation of Liability 18
13 Glossary 19
14 Certification of DER Equipment 25
15 Certification Codes and Standards 27

Foreword

The State of Minnesota currently has interconnection process standards in effect to address the interconnection of distributed energy resources (DER) to the distribution grid. Under Minnesota Statute §216B.1611, cooperatives and municipals shall adopt an interconnection process that addresses the same issues as the interconnection process approved by the Minnesota Public Utilities Commission. The Hawley Public Utilities Distributed Energy Resources Interconnection Process (Interconnection Process) applies to any DER no larger than 10-megawatts (MW) AC interconnecting to and operating in parallel with Hawley Public Utilities' distribution system in Minnesota. This interconnection process document is designed to be customer-centric when explaining the steps and details to interconnect DER systems to the distribution grid.

The Interconnection Process is comprised of four manuals: 1) Process Overview, 2) Simplified Process, 3) Fast Track Process, and 4) Study Process and also contains several forms, including a final Interconnection Agreement. For the majority of DER interconnections, only the Process Overview and the Simplified Process manuals will apply. For larger and more complex DER interconnections, the Fast Track Process or the Study Process may apply.

As part of the Interconnection Process, an Interconnection Agreement is to be executed prior to interconnecting a DER system to the utility distribution grid. For most DER interconnections, the utility's Contract for Cogeneration and Small Power Production Facilities (Uniform Contract) will be used. For DER systems that do not fall under the terms of the Uniform Contract, the Municipal Minnesota Interconnection Agreement (MMIA) will apply.

The process to interconnect a DER system to the distribution grid starts with the submission of an Interconnection Application. Each track has different information that is requested in the application and the non-refundable interconnection application fees will vary. Both the electric utility and the interconnecting customer have timelines that are enforced to ensure a timely application review, contract execution and interconnection commissioning.

The key to a successful interconnection of a DER system is communication between all parties. Timely submission of the Interconnection Application prior to the purchase and installation of a DER system is strongly recommended. The Utility encourages customers to ask questions throughout the interconnection process. Interconnecting DER system to the distribution grid is not an effortless process, but it does not need to be a problematic process either.

1 Key Terminology

1.1. Distributed Energy Resource

Distributed Energy Resources, DER, were often referred to in past interconnection processes as Distributed Generation, DG, and on occasion also interchanged with the term Qualifying Facility, QF. This Interconnection Process uses the term DER to address all types of generation and energy resources that can be interconnected to the electric Distribution System. DER technologies can include photovoltaic solar systems, wind turbines, storage batteries or diesel generators and are not limited to renewable types of technologies.

1.2. Point of Common Coupling (PCC) / Point of DER Connection (POC)

DER systems often reside behind the utility's revenue meter of a residence or business. The meter is normally the point of demarcation between the utility-owned equipment and the customer-owned equipment. The term Point of Common Coupling, PCC, is the demarcation location between the utility and the customer.

The Point of DER Connection, PoC, can be different from the PCC. The PoC is the location where a DER system would interconnect to the electrical system normally owned by the customer. For example, the PoC for a rooftop photovoltaic solar system may be the main electrical panel in a customer's home.

1.3. Capacity

Throughout the Interconnection Process will be references to the capacity of the DER system. In most cases, the capacity listed is referring to the Nameplate Capacity of the DER system. All capacity references will be in alternating current, AC.

There can be multiple DER systems with different PoCs that all have the same PCC submitted on a single interconnection application. The capacity for this type of interconnection would be the aggregate Nameplate Capacity of all DER systems at the individual PoCs. Additional examples of DER system arrangements can be seen in Section 13 under the definition of Point of Common Coupling.

2 Roles

2.1. Overview

During the interconnection process for a proposed DER system, there may be multiple entities involved in the application, approval and commissioning processes. The main entities that are involved during the Interconnection Process for a proposed DER system are the Interconnection Customer, the Application Agent and the DER

Interconnection Coordinator. Official definitions of each entity are defined in the Glossary (Section 13). Additional details are explained in the subsections below.

2.2. DER Interconnection Coordinator

The utility is referred to as the Area Electric Power Supply Operator in this Interconnection Process. The Area EPS Operator shall designate a DER Interconnection Coordinator to serve as a single point of contact from which general information on the application process may be obtained. The DER Interconnection Coordinator shall be available to provide coordination assistance with the Interconnection Customer but is not responsible for directly answering or resolving all of the issues involved in review and implementation of the interconnection process and standards.

The contact information of the DER Interconnection Coordinator will be posted on the Area EPS Operator's website if feasible, or available from the utility.

2.3. Interconnection Customer

The owner of the proposed DER system and the entity requesting interconnection to the distribution system.

2.4. Application Agent

The Interconnection Customer may designate, on the Interconnection Application or in writing after the application has been submitted, an Application Agent to serve as a single point of contact to coordinate with the DER Interconnection Coordinator on their behalf. Designation of an Application Agent does not absolve the Interconnection Customer from signing application documents and the responsibilities outlined in the Interconnection Process or in interconnection agreements. DER vendors, project managers or electricians are common entities that the Interconnection Customer may designate to perform this role.

2.5. Engineering Roles

Either party may designate a specific person to be a single point of contact to provide technical expertise during the Interconnection Process for themselves or their organization. The person to supply engineering expertise may be a third party such as an engineering consultant or manufacturer's engineer.

3 Processes

3.1. Overview

The Interconnection Process applies to any DER no larger than 10 MW AC interconnecting to and operating in parallel with an Area EPS distribution system in

Minnesota. Interested parties with plans to interconnect DER systems larger than 10 MW AC to the distribution system should contact the Area EPS Operator for a case-specific interconnection process. Federal Energy Regulatory Commission's (FERC) interconnection process will supersede any interconnection process the Area EPS Operator has for DER system interconnections that fall under the jurisdiction of FERC.

The Interconnection Process for DER is broken into three different tracks; the Simplified Process, the Fast Track Process, and the Study Process. The general classification of each track is summarized in Table 3.1 below.

Table 3.1. Interconnection Process Tracks

Track	DER Technology	Size Limitations
Simplified Process	Certified Inverter only	20 kW AC
Fast Track Process	All types	5 MW AC
Study Process	All types	10 MW AC

If engineering screens are failed during the application process, a proposed DER interconnection may be moved into a different track. When a proposed DER interconnection is moved into a different track, additional information may be requested and additional fees may apply.

3.2. Importance of Process Timelines

It is very important to pay attention to timelines listed for each process track. The timelines exist for an orderly and efficient process to interconnect DER systems to the Distribution System. If a timeline is missed by an Interconnection Customer, without the Interconnection Customer requesting a Timeline Extension explained in Section 10, the Interconnection Application will be deemed withdrawn by the Area EPS Operator.

The Area EPS Operator also needs to abide by the timelines listed for each process track. The process for an Area EPS Operator to request Timeline Extensions is also addressed in Section 10.

Unless otherwise stated, all time frames are measured in Business Days. For purpose of measuring these time intervals, the time shall be computed so as to exclude the first and include the last day of the prescribed duration of time. Any communication sent or received after 4:30 p.m. Central Prevailing Time or on a Saturday, Sunday or Holiday shall be considered to be sent on the next Business Day.

3.3. Simplified Process

An application to interconnect a certified[1], inverter-based DER system no larger than 20 kilowatts (kW) shall be evaluated under the Simplified Process. A common form of DER inverter certification is UL 1741. Proposed DER systems that require Area EPS system modifications to accommodate the interconnection do not qualify for the Simplified Process. A transformer change, fusing upgrades or line extensions are common examples of Area EPS system modification. Simplified Process eligibility does not imply or indicate the Interconnection Application will pass the initial review screens. Failure to pass the screens will route the Interconnection Application to the Fast Track Process.

3.4. Fast Track Process

An application to interconnect a DER shall be evaluated under the Fast Track Process if the eligibility requirements are not exceeded in Table 3.2 and the application does not qualify for the Simplified Process. Fast Track eligibility for DERs is determined based upon the generator type, the size of the generator, voltage of the line, and the location and type of line at the Point of Common Coupling, (PCC). All synchronous and induction machines must be no larger than 2 MW to be eligible for Fast Track Process consideration.

Table 3.2. Fast Track Eligibility for DER

Line Voltage	Fast Track Eligibility[2] Regardless of Location	Fast Track Eligibility for certified, inverter-based DER on a Mainline[3] and ≤ 2.5 Electrical Circuit Miles from Substation[4]
< 5 kV	≤ 500 kW	≤ 500 kW
≥ 5 kV and < 15 kV	≤ 1 MW	≤ 2 MW
≥ 15 kV and < 30 kV	≤ 2 MW	≤ 4 MW
≥ 30 kV and ≤ 69 kV	≤ 4 MW	≤ 5 MW

In addition to the size threshold, the Interconnection Customer's proposed DER must meet the codes, standards and certification requirements found in Section 15 and Section 14.

[1] Additional information regarding certified equipment is found in Sections 14 and 15.

[2] Synchronous and induction machine eligibility is limited to no more than 2 MW even when line voltage is greater than 15 kV.

[3] For purposes of this table, a Mainline is the three-phase backbone of a circuit. It will typically constitute lines with wire sizes of 4/0 American wire gauge, 266 kcmil, 336.4 kcmil, 397.5 kcmil, 477 kcmil and 795 kcmil.

[4] An Interconnection Customer can determine this information about its proposed interconnection location in advance by requesting a pre-application report described in Section 5.

3.5. Study Process

An application to interconnect a DER that does not meet the Simplified Process or Fast Track Process eligibility requirements or does not pass the review as described in either process, shall be evaluated under the Study Process.

3.6. Process Assistance

Prior to submitting an Interconnection Application, the Interconnection Customer may ask the Area EPS Operator's DER Interconnection Coordinator which process track a proposed interconnection is subject to and about additional details regarding each process track.

An Interconnection Customer can obtain, through an informal request, general information about the Interconnection Process and about potentially Affected System(s) for a proposed interconnection at a specific location. The existing electric system information provided to the Interconnection Customer should include relevant system study results, interconnection studies, and other materials useful to an understanding of an interconnection at a particular point on the Area EPS Operator's System. Information will be provided to the extent such provision does not violate the privacy policies of the Area EPS Operator, confidentiality provisions of prior agreements or critical infrastructure requirements. The Area EPS Operator shall comply with reasonable requests for such information.

4 Interconnection Application

4.1. Overview

Each process track has different information that needs to be provided to the Area EPS Operator. Table 4.1 indicates which application is to be completed in its entirety and submitted to the Area EPS Operator to start the interconnection process for the proposed DER system.

Table 4.1. Interconnection Application

Process Track	Application
Simplified	Simplified Interconnection Application
Fast Track	Standard Interconnection Application
Study	Standard Interconnection Application

The Area EPS Operator will provide all necessary Interconnection Applications, Interconnection Process documents and sample interconnection agreements on its website if possible. The Area EPS Operator will also accept Interconnection Applications

submitted electronically either through a web portal or to an email address specified by the Area EPS Operator. The Area EPS Operator may allow the Interconnection Application to be submitted with an electronic signature.

4.2. Availability of Information

The Area EPS Operator will provide all necessary Interconnection Applications, Interconnection Process documents and sample interconnection agreements on its website if possible. If a website is not available, the applicable documents will be readily available at the Area EPS Operator's main office.

The Area EPS Operator will establish a public queue of active interconnection applications on its website once the Area EPS Operator has received at least 40 completed Interconnection Applications in a year. The public queue will be updated, at minimum, on a monthly basis.

4.3. Interconnection Application Process Fees

Each Interconnection Application submitted to the Area EPS Operator must include the appropriate interconnection application process fee prior to the Area EPS Operator reviewing the Interconnection Application. The required process fee for each process track is listed in Table 4.2.

Table 4.2. Interconnection Application Process Fee

Process Track		Process Fee
Simplified		$100
Fast Track	Certified[5] System	$100 + $1/kW
	Non-Certified System	$100 + $2/kW
Study		$1,000 + $2/kW down payment. Additional study fees may apply.

4.4. Application Review Timelines

The Interconnection Application shall be date- and time-stamped upon initial, and if necessary, resubmission receipt. The Area EPS Operator shall notify the Interconnection Customer if the Interconnection Application is deemed incomplete within ten (10) Business Days. This notification shall include a written list detailing all information that must be provided to complete the Interconnection Application. Depending on the process track the Interconnection Customer has between five (5) and ten (10) Business Days to provide the missing information unless additional time is

[5] Additional information regarding certified equipment is found in Sections 14 and 15.

requested with valid reasons. Failure to submit the requested information within the stated timeline will result in the Interconnection Application being withdrawn.

An Interconnection Application will be deemed complete upon submission to the Area EPS Operator when all documents, fees and information required with the Interconnection Application adhering to Minnesota Technical Requirements are included. The time- and date- stamp of the completed Interconnection Application shall be accepted as the qualifying date for purposes of establishing a queue position as described in Section 4.7.

Depending on the process track the Area EPS Operator has either a total of twenty (20) Business Days or twenty-five (25) Business Days to complete the Interconnection Application review and submit notice back to the Interconnection Customer stating the proposed DER system may proceed with the interconnection process or the proposed DER system requires additional engineering studies. The period of time when waiting for the Interconnection Customer to provide missing information is not included in the Area EPS Operator's twenty (20) Business Days or twenty-five (25) Business Days review timeline.

4.5. Comparability

The Area EPS Operator shall receive, process and analyze all Interconnection Applications in a timely manner. The Area EPS Operator shall use the same Reasonable Efforts in processing and analyzing Interconnection Applications from all Interconnection Customers.

4.6. Changing Process Queues

During the review of the initially submitted Interconnection Application for the proposed DER system, the Area EPS Operator may determine the proposed DER system should be in a different process track. For proposed DER systems that are moved into a different process track after submittal of the initial application, the difference between the originally submitted processing fee and the current process track's processing fee will be assessed. In addition, the Area EPS Operator may request the Interconnection Customer to provide additional information regarding the proposed DER system.

4.7. Queue Position

The Area EPS Operator shall maintain a single, administrative queue and may manage the queue by geographical region. The queue position of each completed Interconnection Application is used to determine the engineering review. The queue position is also used to determine the cost responsibility for system upgrades necessary to accommodate the interconnection.

An Interconnection Application will retain its queue number even when it is moved into a different process track. An Interconnection Application can lose its queue position if the Interconnection Customer misses timelines in the applicable process track. The Interconnection Customer and Area EPS Operator have the opportunity to request timeline extensions which are explained in detail in Section 10.

4.8. Site Control

Documentation of site control must be submitted with the Interconnection Application. Site control may be demonstrated by any of the following:

- Ownership of, a leasehold interest in, or a right to develop a site for the purpose of constructing the DER system.
- An option to purchase or acquire a leasehold site for constructing the DER system.
- An exclusivity or other business relationship between the Interconnection Customer and the entity having the right to sell, lease, or grant to the Interconnection Customer the right to possess or occupy a site for constructing the DER system.

For DER in the Simplified Process, proof of site control may be demonstrated by the site owner's signature on the Simplified Interconnection Application.

5 Pre-Application Report

5.1. Pre-Application Report Requests

The Interconnection Customer may submit a Pre-Application Report Request, including a non-refundable fee of $300, for a Pre-Application Report on a proposed project at a specific site. The Interconnection Customer must fill out the Pre-Application Request form as completely as possible. The Area EPS Operator shall provide the readily available data listed in Section 5.3 within fifteen (15) Business Days of receipt of a completed request form and payment. The Pre-Application Report produced by the Area EPS Operator is non-binding, does not confer any rights, and does not preclude the Interconnection Customer from any interconnection process steps including submission of the Interconnection Application.

5.2. Information Provided

Using the information provided in the Pre-Application Report Request form, the Area EPS Operator will identify the substation/area bus, bank or circuit likely to serve the proposed PCC. This selection by the Area EPS Operator does not necessarily indicate, after application of the screens and/or study, that this would be the circuit the project

ultimately connects to. The Interconnection Customer must request additional Pre-Application Reports if information about multiple PCCs is requested.

The Pre-Application Report will only include existing data. A request for a Pre-Application Report does not obligate the Area EPS Operator to conduct a study or other analysis of the proposed DER in the event that data is not readily available. The Area EPS Operator will provide the Interconnection Customer with the data that is available. The confidentiality provisions in Section 12.1 apply to Pre-Application Reports.

5.3. Pre-Application Report Components

The Pre-Application Report shall include the following pieces of information provided the data currently exists and is readily available.

- Total capacity (in megawatts (MW)) of substation/area bus, bank or circuit based on normal or operating ratings likely to serve the proposed Point of Common Coupling.
- Existing aggregate generation capacity (in MW) interconnected to a substation/area bus, bank or circuit (i.e., amount of generation online) likely to serve the proposed Point of Common Coupling.
- Aggregate queued generation capacity (in MW) for a substation/area bus, bank or circuit (i.e., amount of generation in the queue) likely to serve the proposed Point of Common Coupling.
- Available capacity (in MW) of substation/area bus or bank and circuit likely to serve the proposed Point of Common Coupling (i.e., total capacity less the sum of existing aggregate generation capacity and aggregate queued generation capacity).
- Substation nominal distribution voltage and/or transmission nominal voltage if applicable.
- Nominal distribution circuit voltage at the proposed Point of Common Coupling.
- Approximate circuit distance between the proposed Point of Common Coupling and the substation.
- Relevant line section(s) actual or estimated peak load and minimum load data, including daytime minimum load and absolute minimum load, when available.
- Whether the Point of Common Coupling is located behind a line voltage regulator.

- Number and rating of protective devices and number and type (standard, bi-directional) of voltage regulating devices between the proposed Point of Common Coupling and the substation/area. Identify whether the substation has a load tap changer.

- Number of phases available on the Area EPS medium voltage system at the proposed Point of Common Coupling. If a single phase, distance from the three-phase circuit.

- Limiting conductor ratings from the proposed Point of Common Coupling to the distribution substation.

- Whether the Point of Common Coupling is located on a spot network, grid network, or radial supply.

- Based on the proposed Point of Common Coupling, existing or known constraints such as, but not limited to, electrical dependencies at that location, short circuit interrupting capacity issues, power quality or stability issues on the circuit, capacity constraints, or secondary networks.

6 Capacity of the Distributed Energy Resources

6.1. Existing DER System Expansion

If the Interconnection Application is for an increase in capacity to an existing DER system, the Interconnection Application shall be evaluated on the basis of the total new alternating current (AC) capacity of the DER. The maximum capacity for the DER shall be the aggregate maximum Nameplate Rating unless the conditions in Section 6.3 are met.

6.2. New DER Systems

An Interconnection Application for a DER that includes multiple energy production devices, (i.e. solar and storage), at a site for which the Interconnection Customer seeks a simple Point of Common Coupling, shall be evaluated on the basis of the aggregated maximum Nameplate Rating unless the conditions in Section 6.3 are met.

6.3. Limited Capacity

A DER system may include devices, (i.e. control systems, power relays or other similar device settings), that can limit the maximum capacity at which the DER system can generate into the Area EPS Operator's distribution system. For DER system that include capacity limited devices, the Interconnection Customer must obtain the Area EPS Operator's agreement to consider the DER system with the Nameplate Rating as the

limited capacity. The Area EPS Operator's agreement shall not be unreasonably withheld provided proper documentation is provided showing the effective limit active power output will not adversely affect the safety and reliability of the Area EPS Operator's distribution system. If the Area EPS Operator does not agree, the Interconnection Application must be withdrawn or revised to specify the maximum capacity that the DER system is capable of injecting into the Area EPS Operator's distribution system without such limitations. Nothing in this section shall prevent the Area EPS Operator from considering a higher output, (i.e. aggregate Nameplate Rating), if the limitations do not provide adequate assurance, when evaluating the system impacts.

7 Modification to Interconnection Applications

7.1. Procedures

At any time after the Interconnection Application is deemed complete, the Interconnection Customer or the Area EPS Operator may identify modifications to the proposed DER system that may improve costs and benefits (including reliability) of the proposed DER system and the ability for the Area EPS Operator to accommodate the proposed DER system. The Interconnection Customer shall submit to the Area EPS Operator in writing all proposed modifications to any information provided in the Interconnection Application. The Area EPS Operator cannot unilaterally modify the Interconnection Application.

Additional information regarding modifications to interconnection applications is found in each process track document.

8 Interconnection Agreements

8.1. Timelines

After the Interconnection Application has been approved by the Area EPS Operator, the Area EPS Operator shall provide the Interconnection Customer with an executable Interconnection Agreement within five (5) Business Days. The Interconnection Customer shall have thirty (30) Business Days to sign and return the Interconnection Agreement to the Area EPS Operator. The Area EPS Operator shall sign the Interconnection Agreement within five (5) business days after receiving the signed Interconnection Agreement from the Interconnection Customer.

If the Interconnection Customer fails to return a signed Interconnection Agreement to the Area EPS Operator within thirty (30) Business Days and fails to request an extension as explained in Section 10, the Interconnection Application will be deemed withdrawn.

8.2. Types of Agreements

There are two main types of Interconnection Agreements that may be executed with an approved Interconnection Application. In general, Interconnection Customers with a proposed DER system that qualifies for the Simplified Process track will sign the Area EPS Operator's Uniform Contract for Cogeneration and Small Power Production Facilities (Uniform Contract). Proposed DER systems less than 100 kW that are under the Fast Track process may also sign the Uniform Contract. All other sized DER system will sign the Municipal Minnesota Interconnection Agreement (MMIA). Area EPS Operators who do not purchase the excess generation of the proposed DER system will also require the MMIA to be executed for any size of DER system.

Table 8.1. Interconnection Agreements

Process Track		Interconnection Agreement
Simplified		Uniform Contract
Fast Track	Qualifies for Net Energy Billing	Uniform Contract
	Less than 100 kW & Area EPS Agrees to Purchase Excess Generation	Uniform Contract
	All Other DER systems	MMIA
Study		MMIA

Interconnection Customers may choose to sign the MMIA in lieu of the Uniform Contact. A separate power purchase agreement will also need to be executed if the Uniform Contract is not utilized. Interconnection of the proposed DER system will not occur until a signed Uniform Contract or the MMIA is returned to the Area EPS Operator no later than five (5) days prior to scheduled testing and inspection.

9 Interconnection

9.1. Metering

Any metering requirements necessitated by the use of the DER system shall be installed at the Interconnection Customer's expense. The metering requirement costs will be included in the final invoice of interconnection costs to the Interconnection Customer. The Interconnection Customer is also responsible for metering replacement costs not covered in the Interconnection Customer's general customer charge. The Area EPS Operator may charge Interconnection Customers an ongoing metering-related charge for an estimate of ongoing metering-related costs specifically demonstrated.

9.2. Inspection, Testing and Commissioning

The Interconnection Customer shall arrange for the inspection and testing of the DER system and the Customer's Interconnection Facilities prior to interconnection pursuant

to Minnesota Technical Requirements. Commissioning tests of the Interconnection Customer's installed equipment shall be performed pursuant to applicable codes and standards of Minnesota's Technical Requirements and Section 15.

The Interconnection Customer shall notify the Area EPS Operator of testing and inspection no fewer than five (5) Business Days in advance, or as may be agreed to by the Parties. Depending on the process track, either a Certificate of Completion or a testing procedure shall be submitted to the Area EPS Operator prior to the testing and inspection date. The Area EPS Operator shall send qualified personnel to the DER site to inspect the interconnection and witness the testing. Testing and inspection shall occur on a Business Day at a mutually agreed upon time and date. The Area EPS Operator may waive the right to witness the testing.

9.3. Interconnection Costs

The Interconnection Customer shall pay for the actual cost of the Interconnection Facilities and Distribution Upgrades along with the Area EPS Operator's cost to commission the proposed DER system. An estimate of the interconnection costs shall be stated in the Uniform Contract or MMIA.

9.4. Technical Requirements

The Area EPS Operator shall use Reasonable Efforts to provide the Interconnection Customer the Minnesota Technical Requirements by providing the document with the notice of approval of the interconnection application or by providing a website link to the document. Additionally, the Area EPS Operator shall notify the Interconnection Customer of any changes to these requirements as soon as they are known. Unless notified by the Area EPS Operator, the Interconnection Customer only needs to be in compliance with the current version of the Minnesota Technical Requirements at the time of interconnection.

9.5. Authorization for Parallel Operations

The Interconnection Customer shall not operate its DER system in parallel with the Area EPS Operator's distribution system without prior written authorization from the Area EPS Operator. The Area EPS Operator shall provide such authorization within three (3) Business Days from when the Area EPS Operator receives notification that the Interconnection Customer has complied with all applicable parallel operations requirements; the completion of a successful testing and inspection of the DER system and all payments for issued bills related to the interconnection process that are past due have been paid in full. Such authorization shall not be unreasonably withheld, conditioned or delayed.

10 Extension of Timelines

10.1. Reasonable Efforts

The Area EPS Operator shall make Reasonable Efforts to meet all time frames provided in these procedures. If the Area EPS Operator cannot meet a deadline provided herein, it must notify the Interconnection Customer in writing within three (3) Business Days after the deadline to explain the reason for the failure to meet the deadline and provide an estimated time by which it will complete the applicable interconnection procedure in the process.

10.2. Extensions

For applicable time frames described in these procedures, the Interconnection Customer may request, in writing, one extension equivalent to half of the time originally allotted (e.g., ten (10) Business Days for a twenty (20) Business Days original time frame) which the Area EPS Operator may not unreasonably refuse. No further extensions for the applicable time frame shall be granted absent a Force Majeure Event or other similarly extraordinary circumstance.

11 Disputes

11.1. Procedures

The Parties agree to make good faith efforts to attempt to resolve all disputes arising out of the interconnection process and associated study and Interconnection Agreements. The Parties agree to follow the established dispute resolution policy adopted by the Area EPS Operator.

12 Clauses

12.1. Confidentiality

Confidential Information shall mean any confidential and/or proprietary information provided by one Party to the other Party that is clearly marked or otherwise designated "Confidential." For purposes of these procedures, design, operating specifications, and metering data provided by the Interconnection Customer may be deemed Confidential Information regardless of whether it is clearly marked or otherwise designated as such. If requested by either Party, the other Party shall provide in writing the basis for asserting that the information warrants confidential treatment. Parties providing a Governmental Authority trade secret, or privileged or otherwise not public or nonpublic data under Minnesota Government Data Practices Act, Minnesota Statutes Chapter 13, shall identify such data consistent with the Commission's September 1, 1999 Revised Procedures for Handling Trade Secret and Privileged Data available online at: https://mn.gov/puc/puc-documents/#4.

Confidential Information does not include information previously in the public domain with proper authorization, required to be publicly submitted or divulged by Governmental Authorities (after notice to the other Party and after exhausting any opportunity to oppose such publication or release), or necessary to be publicly divulged in an action to enforce these procedures. Each Party receiving Confidential Information shall hold such information in confidence and shall not disclose it to any third party nor to the public without prior written authorization from the Party providing that information, except to fulfill obligations under these procedures, or to fulfill legal or regulatory requirements that could not otherwise be fulfilled by not making the information public.

Each Party shall hold in confidence and shall not disclose Confidential Information, to any person (except employees, officers, representatives and agents, who agree to be bound by this section). Confidential Information shall be clearly marked as such on each page or otherwise affirmatively identified. If a court, government agency or entity with the right, power, and authority to do so, requests or requires either Party, by subpoena, oral disposition, interrogatories, requests for production of documents, administrative order, or otherwise, to disclose Confidential Information, that Party shall provide the other Party with prompt notice of such request(s) or requirements(s) so that the other Party may seek an appropriate protective order or waive compliance with the terms of this Agreement. In the absence of a protective order or waiver the Party shall disclose such confidential information which, in the opinion of its counsel, the party is legally compelled to disclose. Each Party will use reasonable efforts to obtain reliable assurance that confidential treatment will be accorded to any confidential information furnished.

Critical infrastructure information or information that is deemed or otherwise designated by a Party as Critical Energy/Electric Infrastructure Information (CEII) pursuant to FERC regulation, 18 C.F.R. §388.133, as may be amended from time to time, may be subject to further protections for disclosure as required by FERC or FERC regulations or orders and the disclosing Party's CEII policies. Each Party shall employ at least the same standard of care to protect Confidential Information obtained from the other Party as it employs to protect its own Confidential Information.

Each Party is entitled to equitable relief, by injunction or otherwise, to enforce its rights under this provision to prevent the release of Confidential Information without bond or proof of damages and may seek other remedies available at law or in equity for breach of this provision.

12.2. Non-Warranty

The Area EPS Operator does not give any warranty, expressed or implied, as to the adequacy, safety, or other characteristics of any structures, equipment, wires, appliances or devices owned, operated, installed or maintained by the Interconnection Customer, including without limitation the DER and any structures, equipment, wires, appliances or devices not owned, operated or maintained by the Area EPS Operator. The Area EPS Operator does not guarantee uninterrupted power supply to the DER and will operate the Distribution System with the same reliability standards for the entire customer base.

12.3. Indemnification

Each Party is protected from liability incurred to third parties as a result of carrying out the provisions of this interconnection process and subsequent interconnection agreements. The Parties shall at all times indemnify, defend, and save the other Party harmless from, any and all damages, losses, claims, including claims and actions relating to injury to or death of any person or damage to property, demand, suits, recoveries, costs and expenses, court costs, attorney fees, and all other obligations by or to third parties, arising out of or resulting from the other Party's action or inactions of its obligations under this agreement on behalf of the indemnifying Party, except in cases of gross negligence or intentional wrongdoing by the indemnified Party.

This indemnification obligation shall apply notwithstanding any negligent or intentional acts, errors or omissions of the indemnified Party, but the indemnifying Party's liability to indemnify the indemnified Party shall be reduced in proportion to the percentage by which the indemnified Party's negligent or intentional acts, errors or omissions caused the damages.

Neither Party shall be indemnified for its damages resulting from its sole negligence, intentional acts or willful misconduct. These indemnity provisions shall not be construed to relieve any insurer of its obligation to pay claims consistent with the provisions of a valid insurance policy.

If an indemnified person is entitled to indemnification under this article as a result of a claim by a third party, and the indemnifying Party fails, after notice and reasonable opportunity to proceed under this article, to assume the defense of such claim, such indemnified person may at the expense of the indemnifying Party contest, settle or consent to the entry of any judgment with respect to, or pay in full, such claim.

If an indemnifying party is obligated to indemnify and hold any indemnified person harmless under this article, the amount owing to the indemnified person shall be the

amount of such indemnified person's actual loss, net of any insurance or other recovery.

Promptly after receipt by an indemnified person of any claim or notice of the commencement of any action or administrative or legal proceeding or investigation as to which the indemnity provided for in this article may apply, the indemnified person shall notify the indemnifying party of such fact. Any failure of or delay in such notification shall not affect a Party's indemnification obligation unless such failure or delay is materially prejudicial to the indemnifying party.

12.4. Limitation of Liability

Each party's liability to the other party for any loss, cost, claim, injury, liability, or expense, including reasonable attorney's fees, relating to or arising from any act or omission in its performance of this Agreement, shall be limited to the amount of direct damage actually incurred. In no event shall either party be liable to the other party for an indirect, incidental, special, consequential, or punitive damages of any kind whatsoever, except as allowed under in Section 12.3.

13 Glossary

Affected System – Another Area EPS Operator's System, Transmission Owner's Transmission System, or Transmission System connected generation which may be affected by the proposed interconnection.

Applicant Agent – A person designated in writing by the Interconnection Customer to represent or provide information to the Area EPS on the Interconnection Customer's behalf throughout the interconnection process.

Area EPS – The electric power distribution system connected at the Point of Common Coupling.

Area EPS Operator – An entity that owns, controls, or operates the electric power distribution systems that are used for the provision of electric service in Minnesota. For this Interconnection Process the Area EPS Operator is Hawley Public Utilities.

Business Day – Monday through Friday, excluding Holidays as defined by Minn. Stat. §645.44, Subdivision 5. Any communication to have been sent or received after 4:30 p.m. Central Prevailing Time or on a Saturday, Sunday or holiday shall be considered to have been sent on the next Business Day.

Certified Equipment – Certified equipment is equipment that has been tested by a nationally recognized lab meeting a specific standard. For DER systems, a UL 1741 listing is a common form of DER inverter certification. Additional information is contained in Sections 14 and 15.

Confidential Information – Any confidential and/or proprietary information provided by one Party to the other Party and is clearly marked or otherwise designated "Confidential." All procedures, design, operating specifications, and metering data provided by the Interconnection Customer may be deemed Confidential Information. See Section 12.1 for further information.

Distributed Energy Resource (DER) – A source of electric power that is not directly connected to a bulk power system or central station service. DER includes both generators and energy storage technologies capable of exporting active power to an EPS. An interconnection system or a supplemental DER device that is necessary for compliance with this standard is part of a DER. For the purpose of the Interconnection Process and interconnection agreements, the DER includes the Customer's Interconnection Facilities but shall not include the Area EPS Operator's Interconnection Facilities.

Distribution System – The Area EPS facilities which are not part of the Local EPS, Transmission System or any generation system.

Distribution Upgrades – The additions, modifications, and upgrades to the Distribution System at or beyond the Point of Common Coupling to facilitate interconnection of the DER and render the distribution service necessary to effect the Interconnection Customer's connection to the Distribution System. Distribution Upgrades do not include Interconnection Facilities.

Electric Power System (EPS) – The facilities that deliver electric power to a load.

Fast Track Process – The procedure as described in the Interconnection Process - Fast Track Process for evaluating an Interconnection Application for a DER that meets the eligibility requirements of Section 3.4.

Force Majeure Event – An act of God, labor disturbance, act of the public enemy, war, insurrection, riot, fire, storm or flood, explosion, breakage or accident to machinery or equipment, an order, regulation or restriction imposed by governmental, military or lawfully established civilian authorities, or another cause beyond a Party's control. A Force Majeure Event does not include an act of negligence or intentional wrongdoing.

Good Utility Practice – Any of the practices, methods and acts engaged in or approved by a significant portion of the electric industry during the relevant time period, or any of the practices, methods and act which, in the exercise of reasonable judgment in light of the facts known at the time the decision was made, could have been expected to accomplish the desired result at a reasonable cost consistent with good business practices, reliability, safety and expedition. Good Utility Practice is not intended to be limited to the optimum practice, method, or act to the exclusion of all others, but rather to be acceptable practices, methods, or acts generally accepted in the region.

Governmental Authority – Any federal, state, local or other governmental regulatory or administrative agency, court, commission, department, board, or other governmental subdivision, legislature, rulemaking board, tribunal, or other governmental authority having jurisdiction over the Parties, their respective facilities, or the respective services they provide, and exercising or entitled to exercise any administrative, executive, police, or taxing authority or power; provided, however, that such term does not include the Interconnection Customer, the Area EPS Operator, or any Affiliate thereof. The governing authority of the municipal utility is the authority governing interconnection requirements unless otherwise provided for in the Minnesota Technical Requirements.

Interconnection Agreement – The terms and conditions between the Area EPS Operator and Interconnection Customer (Parties). See Section 8 for when the Uniform Contract or Municipal Minnesota Interconnection Agreement applies.

Interconnection Application – The Standard or Simplified Interconnection Application, as applicable, pursuant to Section 4.

Interconnection Customer – The person or entity, including the Area EPS Operator, who will be the owner of the DER and who proposes to interconnect a DER(s) with the Area EPS Operator's Distribution System. The Interconnection Customer is responsible for ensuring the DER(s) is designed, operated and maintained in compliance with the Minnesota Technical Requirements.

Interconnection Facilities – The Area EPS Operator's Interconnection Facilities and the Interconnection Customer's Interconnection Facilities. Collectively, Interconnection Facilities

include all facilities and equipment between the DER and the Point of Common Coupling, including any modification, additions or upgrades that are necessary to physically and electrically interconnect the DER to the Area EPS Operator's System. Some examples of Customer Interconnection Facilities include supplemental DER devices, inverters, and associated wiring and cables up to the Point of DER Connection. Some examples of Area EPS Operator Interconnection Facilities include sole use facilities; such as, line extensions, controls, relays, switches, breakers, transformers and shall not include Distribution Upgrades or Network Upgrades.

Interconnection Process – The Area EPS Operator's interconnection standards in this document.

Material Modification – A modification to machine data, equipment configuration or to the interconnection site of the DER at any time after receiving notification by the Area EPS Operator of a complete Interconnection Application that has a material impact on the cost, timing, or design of any Interconnection Facilities or Upgrades, or a material impact on the cost, timing or design of any Interconnection Application with a later Queue Position or the safety or reliability of the Area EPS.[6]

MN Technical Requirements – The term including all of the DER technical interconnection requirement documents for the state of Minnesota; including Attachment 2 Distributed Generation Interconnection Requirements established in the Commission's September 28, 2004 Order in E-999/CI-01-1023) until superseded and upon Commission approval of updated Minnesota DER Technical Interconnection and Interoperability Requirements in E-999/CI-16-521 (anticipated July 2019.)

Nameplate Rating – nominal voltage (V), current (A), maximum active power (kWac), apparent power (kVA), and reactive power (kVar) at which a DER is capable of sustained operation. For a Local EPS with multiple DER units, the aggregate nameplate rating is equal to the sum of all DERs nameplate rating in the Local EPS. For purposes of the Attachment V in the Interconnection Agreement, the DER system's capacity may, with the Area EPS's agreement, be

[6] A Material Modification shall include, but may not be limited to, a modification from the approved Interconnection Application that: (1) changes the physical location of the point of common coupling such that it is likely to have an impact on technical review; (2) increases the nameplate rating or output characteristics of the Distributed Energy Resource; (3) changes or replaces generating equipment, such as generator(s), inverter(s), transformers, relaying, controls, etc., and substitutes equipment that is not like-kind substitution in certification, size, ratings, impedances, efficiencies or capabilities of the equipment; (4) changes transformer connection(s) or grounding; and/or (5) changes to a certified inverter with different specifications or different inverter control settings or configuration. A Material Modification shall not include a modification from the approved Interconnection Application that: (1) changes the ownership of a Distributed Energy Resource; (2) changes the address of the Distributed Energy Resource, so long as the physical point of common coupling remains the same; (3) changes or replaces generating equipment such as generator(s), inverter(s), solar panel(s), transformers, relaying, controls, etc. and substitutes equipment that is a like-kind substitution in certification, size, ratings, impedances, efficiencies or capabilities of the equipment; and/or (4) increases the DC/AC ratio but does not increase the maximum AC output capability of the Distributed Energy Resource in a way that is likely to have an impact on technical review.

limited thought use of control systems, power relays or similar device settings or adjustments as identified in IEEE 1547. The nameplate ratings referenced in the Interconnection Process are alternating current nameplate DER ratings at the Point of DER Coupling.

Network Upgrades – Additions, modifications, and upgrades to the Transmission System required at or beyond the point at which the DER interconnects with the Area EPS Operator's System to accommodate the interconnection with the DER to the Area EPS Operator's System. Network Upgrades do not include Distribution Upgrades.

Operating Requirements – Any operating and technical requirements that may be applicable due to the Transmission Provider's technical requirements or Minnesota Technical Requirements, including those set forth in the Interconnection Agreement.

Party or Parties – The Area EPS Operator and the Interconnection Customer.

Point of Common Coupling (PCC) – The point where the Interconnection Facilities connect with the Area EPS Operator's Distribution System. See figure 1. Equivalent, in most cases, to "service point" as specified by the Area EPS Operator and described in the National Electrical Code and the National Electrical Safety Code.

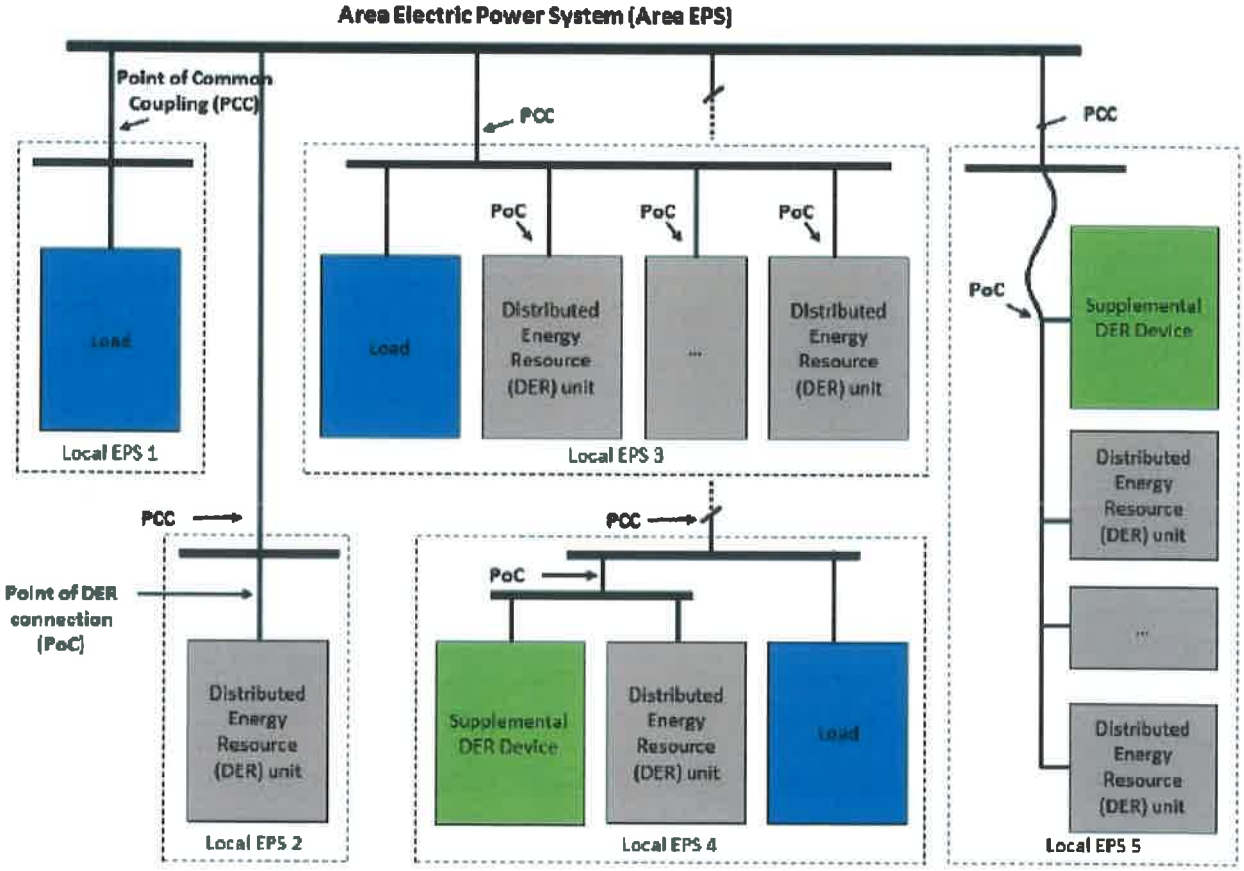

Figure 1: Point of Common Coupling and Point of DER Connection (Source: IEEE 1547)

Point of DER Connection (PoC) – When identified as the Reference Point of Applicability, the point where an individual DER is electrically connected in a Local EPS and meets the requirements of this standard exclusive of any load present in the respective part of the Local EPS (e.g. terminals of the inverter when no supplemental DER device is required). For DER unit(s) that are not self-sufficient to meet the requirements without a supplemental DER device(s), the Point of DER Connection is the point where the requirements of this standard are met by DER in conjunction with a supplemental DER device(s) exclusive of any load present in the respective part of the Local EPS.

Queue Position – The order of a valid Interconnection Application, relative to all other pending valid Interconnection Applications, that is established based upon the date- and time- of receipt of the complete Interconnection Application as described in Section 4.7.

Reasonable Efforts – With respect to an action required to be attempted or taken by a Party under these procedures, efforts that are timely and consistent with Good Utility Practice and are otherwise substantially equivalent to those a Party would use to protect its own interests.

Reference Point of Applicability – The location, either the Point of Common Coupling or the Point of DER Connection, where the interconnection and interoperability performance requirements specified in IEEE 1547 apply. With mutual agreement, the Area EPS Operator and Customer may determine a point between the Point of Common Coupling and Point of DER Connection. See Minnesota Technical Requirements for more information.

Simplified Process – The procedure for evaluating an Interconnection Application for a certified inverter-based DER no larger than 20 kW that uses the screens described in the Interconnection Process – Simplified Process document. The Simplified Process includes simplified procedures.

Study Process – The procedure for evaluating an Interconnection Application that includes the scoping meeting, system impact study, and facilities study.

Transmission Owner – The entity that owns, leases or otherwise possesses an interest in the portion of the Transmission System relevant to the Interconnection.

Transmission Provider – The entity (or its designated agent) that owns, leases, controls, or operates transmission facilities used for the transmission of electricity. The term Transmission Provider includes the Transmission Owner when the Transmission Owner is separate from the Transmission Provider. The Transmission Provider may include the Independent System Operator or Regional Transmission Operator.

Transmission System – The facilities owned, leased, controlled or operated by the Transmission Provider or the Transmission Owner that are used to provide transmission service. See the Commission's July 26, 2000 Order Adopting Boundary Guidelines for Distinguishing Transmission from Generation and Distribution Assets in Docket No. E-999/CI-99-1261.

Uniform Contract – the Area EPS Operator's Agreement for Cogeneration and Small Power Production Facilities (Uniform Contract) that may be applied to all qualifying new and existing interconnections between the Area EPS Operator and a DER system having capacity less than 40 kilowatts.

Upgrades – The required additions and modifications to the Area EPS Operator's Transmission or Distribution System at or beyond the Point of Interconnection. Upgrades may be Network Upgrades or Distribution Upgrades. Upgrades do not include Interconnection Facilities.

14 Certification of DER Equipment

Distributed Energy Resource (DER) equipment proposed for use in an interconnection system shall be considered certified for interconnected operation if the following criteria is met:

1) It has been tested in accordance with industry standards for continuous utility interactive operation in compliance with the appropriate codes and standards referenced below by any Nationally Recognized Testing Laboratory (NRTL) recognized by the United States Occupational Safety and Health Administration to test and certify interconnection equipment pursuant to the relevant codes and standards listed in the Overview Process,

2) It has been labeled and is publicly listed by such NRTL at the time of the interconnection application, and

3) Such NRTL makes readily available for verification all test standards and procedures it utilized in performing such equipment certification, and, with consumer approval, the test data itself. The NRTL may make such information available on its website and by encouraging such information to be included in the manufacturer's literature accompanying the equipment.

The Interconnection Customer must verify that the assembly and use of the equipment falls within the use or uses for which the equipment was tested, labeled, and listed by the NRTL.

Certified equipment shall not require further type-test review, testing, or additional equipment to meet the requirements of this interconnection procedure; however, nothing herein shall preclude the need for a DER Design Evaluation or an on-site commissioning test by the parties to the interconnection as provided for in the Minnesota Technical Requirements.

If the certified equipment package includes only interface components (switchgear, inverters, or other interface devices), then an Interconnection Customer must show that the generator or other electric source being utilized with the equipment package is compatible with the equipment package and is consistent with the testing and listing specified for this type of interconnection equipment.

Provided the generator or electric source, when combined with the equipment package, is within the range of capabilities for which it was tested by the NRTL and does not violate the interface components' labeling and listing performed by the NRTL, no further type-test review, testing or additional equipment on the customer side of the Point of Common Coupling shall be required to be considered certified for the purposes of this interconnection procedure; however, nothing herein shall preclude the need for a DER design evaluation or an on-site

commissioning test by the parties to the interconnection as provided for in the Minnesota Technical Requirements.

An equipment package does not include equipment provided by the Area EPS.

15 Certification Codes and Standards

The existing Minnesota Technical Requirements and the following standards shall be used in conjunction with the Interconnection Process. The process has started to update the Technical Requirements to meet IEEE 1547-2018. Once that process is completed, the updated DER Technical Interconnection and Interoperability Requirements will supersede this section.

When the stated version of the following standards is superseded by an approved revision then that revision shall apply:

IEEE 1547-2003 IEEE Standard for Interconnecting Distributed Resources with Electric Power Systems

IEEE 1547a-2014 IEEE Standard for Interconnecting Distributed Resources with Electric Power Systems – Amendment 1

IEEE 1547.1-2005 IEEE Standard Conformance Test Procedures for Equipment Interconnecting Distributed Resources with Electric Power Systems

IEEE 1547.1a-2015 (Amendment to IEEE Std 1547.1-2005) IEEE Standard Conformance Test Procedures for Equipment Interconnecting Distributed Resources with Electric Power Systems – Amendment 1

UL 1741 Inverters, Converters, Controllers, and Interconnection System Equipment for Use in Distributed Energy Resources (2010)

NFPA 70 (2017), National Electrical Code

IEEE Std C37.90.1 (2012) (Revision of IEEE Std C37.90.1-2002), IEEE Standard for Surge Withstand Capability (SWC) Tests for Protective Relays and Relay Systems Associated with Electric Power Apparatus

IEEE Std C37.90.2 (2004) (Revision of IEEE Std C37.90.2-1995), IEEE Standard for Withstand Capability of Relay Systems to Radiated Electromagnetic Interference from Transceivers

IEEE Std C37.108-20021989 (Revision of C37.108-19892002), IEEE Guide for the Protection of Network Transformers

IEEE Std C57.12.44-2014 (Revision of IEEE Std C57.12.44-2005), IEEE Standard Requirements for Secondary Network Protectors

IEEE Std C62.41.2-2002, IEEE Recommended Practice on Characterization of Surges in Low-Voltage (1000 V and Less) AC Power Circuits

IEEE Std C62.41.2-2002_Cor 1-2012 (Corrigendum to IEEE Std C62.41.2-2002) – IEEE Recommended Practice on Characterization of Surges in Low-Voltage (1000 V and Less) AC Power Circuits Corrigendum 1: Deletion of Table A.2 and Associated Text

IEEE Std C62.45-2002 (Revision of IEEE Std C62.45-1992) – IEEE Recommended Practice on Surge Testing for Equipment Connected to Low-Voltage (1000 V and less) AC Power Circuits

ANSI C84.1-(2016) Electric Power Systems and Equipment – Voltage Ratings (60 Hertz)

IEEE Standards Dictionary Online, [Online]

NEMA MG 1-2016, Motors and Generators

IEEE Std 519-2014, IEEE Recommended Practices and Requirements for Harmonic Control in Electrical Power Systems

Owatonna Public Utility's 10 kW Demonstration Solar
Owatonna, MN

INTERCONNECTION PROCESS

Simplified Process

ABSTRACT

Information in addition to the "Process Overview" for interconnecting Distributed Energy Resources of up to 20 kilowatts in size to the utility distribution system.

Contents

1 Applicability 1

1.1. Capacity Limit 1

1.2. Certified Inverters 1

2 Application Submission 1

2.1. Simplified Process Application 1

2.2. Battery Storage 1

2.3. Site Control 2

3 Application Review 2

3.1. Timelines 2

3.2. Initial Review Screens 3

3.3. Notification of Approval of Application 4

3.4. Failure of Review Screens 4

4 Interconnection Agreement 5

4.1. Uniform Contract 5

4.2. Municipal Minnesota Interconnection Agreement 5

4.3. Completion of Agreement 5

5 Insurance 6

5.1. Insurance Requirements 6

5.2. Self-Insurance 6

5.3. Proof of Insurance 6

6 Timeline Extensions 7

6.1. Reasonable Efforts 7

6.2. Extensions 7

7 Modifications to Application 7

7.1. Procedures 7

7.2. Timelines 7

8 Interconnection 8

8.1. Metering 8

8.2. Construction 8

8.3. Inspection, Testing and Commissioning 8
8.4. Interconnection Costs 9
8.5. Authorization for Parallel Operation 10
8.6. Continual Compliance 10
8.7. Disconnection of DER 10

1 Applicability

1.1. Capacity Limit

The Simplified Process only is applicable to certified inverter-based Distributed Energy Resource (DER) systems with the capacity of 20 kW AC or less. The capacity is determined by the aggregated summation of the Nameplate Rating of the inverters that make up the DER system. Additional information regarding the capacity limits can be seen in Section 6 of the Process Overview document.

1.2. Certified Inverters

A certified inverter will have certification of meeting the current version of the IEEE standard 1547. A common inverter certification is UL 1741. Note that certified inverters may still need to have a setting adjusted to meet the technical requirements of the Area EPS Operator. Additional information regarding certified equipment is found in Section 14 and Section 15 of the Process Overview document.

2 Application Submission

2.1. Simplified Process Application

The Interconnection Customer shall complete the Simplified Interconnection Application and submit it to the Area EPS Operator to initialize the Interconnection Process. A completed Simplified Interconnection Application will include the following:

- A completed Simplified Interconnection Application signed by the Interconnection Customer,
- A non-refundable processing fee of $100,
- An aerial site layout drawing of the proposed DER system,
- A one-line diagram of the proposed DER system showing the point of common coupling, PCC, to the Area EPS Operator's Distribution System, and
- All certified equipment manufacturer specification sheets.

2.2. Battery Storage

An inverter-based DER system may include battery storage. DER systems that include battery storage must also complete the Energy Storage Application with the Simplified Interconnection Application.

2.3. Site Control

By signing the Simplified Interconnection Application, the Interconnection Customer is indicating that the proposed DER system is being located where the Interconnection Customer has site control. Site control includes ownership of, a leasehold interest in, or a right to develop a site for the purpose of construction of a DER. Additional information regarding Site Control can be reviewed in the Process Overview document in Section 4.8.

3 Application Review

3.1. Timelines

The Interconnection Application shall be date- and time-stamped upon initial, and if necessary, resubmission receipt. The Interconnection Customer shall be notified of receipt by the Area EPS Operator within ten (10) Business Days of receipt of the Interconnection Application.

The Area EPS Operator shall notify the Interconnection Customer if the Interconnection Application is deemed incomplete within ten (10) Business Days and provide a written list detailing all information that must be provided to complete the Interconnection Application. The Interconnection Customer has five (5) Business Days to provide the missing information unless additional time is requested with valid reasons. Failure to submit the requested information within the stated timeline will deem the Interconnection Application withdrawn. The Area EPS Operator has an additional five (5) Business Days to review the additionally provided information for completeness.

An Interconnection Application will be deemed complete upon submission to the Area EPS Operator provided all documents, fees and information required with the Interconnection Application adhering to Minnesota Technical Requirements is included. The time- and date- stamp of the completed Interconnection Application shall be accepted as the qualifying date for the purpose of establishing a queue position as described in Section 4.7 of the Overview Process document.

The Area EPS Operator has a total of twenty (20) Business Days to complete the Interconnection Application review from the receipt of a completed Interconnection Application and submit notice back to the Interconnection Customer stating the proposed DER system may proceed with the interconnection process or the proposed DER system has been moved into a different process track. The time during which the Interconnection Customer provides missing information is not included in the Area EPS Operator's twenty (20) Business Days review timeline.

3.2. Initial Review Screens

The Area EPS Operator shall determine if the DER can be interconnected safely and reliably using Initial Review Screens and without the construction of facilities by the Area EPS Operator. The Initial Review screens include the following engineering screens:

- The proposed DER's PCC must be on a portion of the Area EPS Operator's Distribution System.

- For interconnection of a proposed DER to a radial distribution circuit, the aggregated generation, including the proposed DER, on the circuit shall not exceed 15% of the line section annual peak load as most recently measured or 100% of the substation aggregated minimum load. A line section is that portion of an Area EPS Operator's electric system connected to a customer bounded by automatic sectionalizing devices or the end of the distribution line. The Area EPS Operator may consider 100% of applicable loading (i.e. daytime minimum load for solar), if available, instead of 15% of line section peak load.

- For interconnection of a proposed DER to the load side of network protectors, the proposed DER must utilize an inverter-based equipment package and, together with the aggregated other inverter-based DERs, shall not exceed the smaller of 5% of a network's maximum load or 50 kW.[1]

- The proposed DER, in aggregation with other DERs on the distribution circuit, shall not contribute more than 10% to the distribution circuit's maximum fault current at the point on the high voltage (primary) level nearest the proposed PCC.

- The proposed DER, in aggregate with other Distributed Energy Resources on the distribution circuit, shall not cause any distribution protective devices and equipment (including, but not limited to, substation breakers, fuse cutouts, and line reclosers), or Interconnection Customer equipment on the system to exceed 87.5% of the short circuit interrupting capability; nor shall the interconnection be proposed for a circuit that already exceeds 87.5% of the short circuit interrupting capability.

---

[1] Network protectors are protective devices used on secondary networks (spot and grid networks) to automatically disconnect their associated transformers when reverse power flow occurs. Secondary networks are most often used in densely populated downtown areas.

- Using the table below, determine the type of interconnection to a primary distribution line. This screen includes a review of the type of electrical service provided to the Interconnecting Customer, including line configuration and the transformer connection to limit the potential for creating over-voltages on the Area EPS Operator's electric power system due to a loss of ground during the operating time of any anti-islanding function.

Primary Distribution Line Type	Type of Interconnection to Primary Distribution Line	Results
Three-Phase, three wire	Three-phase or single-phase, phase-to-phase	Pass Screen
Three-phase, four wire	Effectively-grounded three-phase or single-phase, line-to-neutral	Pass Screen

- If the proposed DER is to be interconnected on single-phase shared secondary, the aggregate generation capacity on the shared secondary, including the proposed DER, shall not exceed 20 kW or 65% of the transformer nameplate rating.

- If the proposed DER is single-phase and is to be interconnected on a center tap neutral of a 240-volt service, its addition shall not create an imbalance between the two sides of the 240-volt service of more than 20% of the nameplate rating of the service transformer.

The technical screens listed shall not preclude the Area EPS Operator from using tools that perform screening functions using different methodologies given the analysis is aimed at preventing the voltage, thermal and protection limitations as the listed screen.

3.3. Notification of Approval of Application

Provided the Simplified Interconnection Application passes the initial screens, or if the proposed interconnection fails the screens but the Area EPS Operator determines that the DER may never the less be interconnected consistent with safety, reliability and power quality standards, the Area EPS Operator shall provide notice to the Interconnection Customer that their Simplified Interconnection Application has been approved.

3.4. Failure of Review Screens

If the proposed interconnection fails the screens the Interconnection Customer will be notified by the Area EPS Operator that the Simplified Interconnection Application has

been moved to the Fast Track Process. The Area EPS Operator shall provide the Interconnection Customer the opportunity to attend a customer options meeting. Additional information regarding the customer options meeting is found in Section 3.5 of the Fast Track Process document. The Interconnection Customer will need to provide a completed Interconnection Application to the Area EPS Operator prior to, or at the customer options meeting.

The Area EPS Operator shall notify the Interconnection Customer of the determination and provide copies of all directly pertinent data and analyses underlying its conclusion, subjected to confidentiality provisions in Section 12.1 of the Overview Process document.

4 Interconnection Agreement

4.1. Uniform Contract

The Area EPS Operator shall provide the Interconnection Customer with an executable copy of the Area EPS Operator's Contract for Cogeneration and Small Power Production Facilities (Uniform Contract) within five (5) Business Days of notice of approval of the Simplified Interconnection Application.

4.2. Municipal Minnesota Interconnection Agreement

The Interconnection Customer may request on the Simplified Interconnection Application an executable copy of the Area EPS Operator's Municipal Minnesota Interconnection Agreement (MMIA) in lieu of signing the Uniform Contract. If the MMIA is requested, the Area EPS Operator shall provide an executable copy of the MMIA within five (5) Business Days of notice of approval of the Simplified Interconnection Application.

4.3. Completion of Agreement

The Interconnection Customer must return a signed Uniform Contract or MMIA at least thirty (30) Business Days prior to a requested in-service date of the propose DER. The Area EPS Operator shall sign and return a copy of the fully executed Uniform Contract or the MMIA back to the Interconnection Customer.

The Interconnection Customer may update the requested in-service date submitted on the Simplified Interconnection Application to a date thirty (30) Business Days or later from the date on which the Interconnection Customer submits a signed Uniform Contract or MMIA and payment, if required, unless the Area EPS Operator agrees to an earlier date.

Upon receipt of the signed Uniform Contract or MMIA, the Area EPS Operator may schedule appropriate metering replacements and construction of facilities, if necessary.

5 Insurance

5.1. Insurance Requirements

At minimum, the Interconnection Customer shall maintain, for the duration the DER system is interconnected to the Area EPS Operator's Distribution System, $300,000 of general liability insurance from a qualified insurance agency with a B+ or better rating by "Best." Such general liability insurance shall include coverage against claims for damages resulting from (i) bodily injury, including wrongful death; and (ii) property damage arising out of the Interconnection Customer's ownership and/or operation of the DER under this agreement. Evidence of the insurance shall state that coverage provided is primary and is not excess to or contributing with any insurance or self-insurance by the Area EPS Operator.

5.2. Self-Insurance

The Interconnection Customer may choose to be self-insured provided there is an established record of self-insurance. The Interconnection Customer shall supply the Area EPS Operator at least twenty (20) days prior to the date of initial operation, evidence of an acceptable plan to self-insure to a level of coverage equivalent to that required in Section 5.1. Failure of the Interconnection Customer or the Area EPS Operator to enforce the minimum levels of insurance does not relieve the Interconnection Customer from maintaining such levels of insurance or relieve the Interconnection Customer of any liability.

5.3. Proof of Insurance

Prior to initial operation of the DER, the Interconnection Customer shall furnish the Area EPS Operator with the Declarations page of the Homeowner's insurance policy documenting insurance of the DER, if applicable or other insurance certificates and endorsements documenting insurance. Thereafter, the Area EPS Operator shall have the right to periodically inspect or obtain a copy of the original policy or polices of insurance. Additionally, the Area EPS Operator may request to be additionally listed as an interested third party on the insurance certificates and endorsements to meet the right to periodically obtain a copy of the policy or policies of insurance.

6 Timeline Extensions

6.1. Reasonable Efforts

The Area EPS Operator shall make Reasonable Efforts to meet all time frames provided in these procedures. If the Area EPS Operator cannot meet a deadline provided herein, it must notify the Interconnection Customer in writing within three (3) Business Days after the deadline to explain the reason for the failure to meet the deadline and provide an estimated time by which it will complete the applicable interconnection procedure in the process.

6.2. Extensions

For applicable time frames described in these procedures, the Interconnection Customer may request in writing one extension equivalent to half of the time originally allotted (e.g., ten (10) Business Days for a twenty (20) Business Days original time frame) which the Area EPS Operator may not unreasonably refuse. No further extensions for the applicable time frame shall be granted absent a Force Majeure Event or other similarly extraordinary circumstance.

7 Modifications to Application

7.1. Procedures

At any time after the Interconnection Application is deemed complete, the Interconnection Customer or the Area EPS Operator may identify modifications to the proposed DER system that may improve costs and benefits (including reliability) of the proposed DER system and the ability for the Area EPS Operator to accommodate the proposed DER system. The Interconnection Customer shall submit to the Area EPS Operator in writing all proposed modifications to any information provided in the Interconnection Application. The Area EPS Operator cannot unilaterally modify the Interconnection Application.

7.2. Timelines

Within ten (10) Business Days of receipt of the proposed modification, the Area EPS Operator shall evaluate whether the proposed modification to the Interconnection Application constitutes a Material Modification. The definition in Section 13 Glossary of the Process Overview document includes examples of what does and does not constitute a Material Modification.

The Area EPS Operator shall notify the Interconnection Customer in writing of the final determination of the proposed modification. For proposed modifications that are

determined to be a Material Modification the Interconnection Customer may choose to either: 1) withdraw the proposed modification; or 2) proceed with a new Interconnection Application. The Interconnection Customer shall provide its determination in writing to the Area EPS Operator within ten (10) Business Days after being provided the Material Modification determination. If the Interconnection Customer does not provide its determination within the timeline, the Interconnection Application shall be considered withdrawn.

If the proposed modification is not determined to be a Material Modification, then the Area EPS Operator shall notify the Interconnection Customer in writing that the modification has been accepted and the Interconnection Customer shall retain its eligibility for interconnection, including its place in the queue.

8 Interconnection

8.1. Metering

Any metering requirements necessitated by the use of the DER system shall be installed at the Interconnection Customer's expense. The metering requirement costs will be included in the final invoice of interconnection costs to the Interconnection Customer. The Interconnection Customer is also responsible for metering replacement costs not covered in the Interconnection Customer's general customer charge. The Area EPS Operator may charge Interconnection Customers an ongoing metering-related charge for an estimate of ongoing metering-related costs specifically demonstrated.

8.2. Construction

The Interconnection Customer may proceed to construct (including operational testing not to exceed two hours) the DER system when the Area EPS Operator has approved the Simplified Interconnection Application. Upon receipt of a signed Uniform Contract or MMIA the Area EPS Operator shall schedule and execute appropriate construction of facilities, if necessary, which shall be completed prior to the Interconnection Customer returning the Certification of Completion. The Area EPS Operator will notify the Interconnection Customer when construction of the distribution facilities is completed.

8.3. Inspection, Testing and Commissioning

Upon completing construction of the DER system, the Interconnection Customer will cause the DER system to be inspected or otherwise certified by the appropriate local electrical wiring inspector with jurisdiction. The Interconnection Customer shall then arrange for the inspection and testing of the DER system and the Customer's Interconnection Facilities prior to interconnection pursuant to Minnesota Technical Requirements. Commissioning test of the Interconnection Customer's installed

equipment shall be performed pursuant to applicable codes and standards of Minnesota's Technical Requirements. The Interconnection Customer shall provide the Area EPS Operator with a Certificate of Completion after completion of the DER installation.

Prior to parallel operation, the Area EPS Operator may inspect the DER for compliance with standards, which may include a witness test, and schedule appropriate metering replacements, if necessary. The Area EPS Operator shall send qualified personnel to the DER site to inspect the interconnection and witness the testing but bears no liability for the results of the test.

The Area EPS Operator is obligated to complete the witness test, if required, within ten (10) Business Days of receipt of the Certification of Completion. If the Area EPS Operator does not inspect within ten (10) Business Days, the witness test is deemed waived unless upon mutual agreement of both Parties to extend the timeline for the witness test.

Within three (3) Business Days of satisfactory inspection or waiver of inspection, the Area EPS Operator shall provide the Interconnection Customer written acknowledgment that the DER has permission to operate. Such written acknowledgment shall not be deemed to be or construed as any representation, assurance, guarantee, or warranty by the Area EPS Operator of the safety, durability, suitability, or reliability of the DER or any associated control, protective, and safety devices owned or controlled by the Interconnection Customer or the quality of power produced by the DER.

If the witness test is not satisfactory, the Area EPS Operator has the right to disconnect the DER. The Interconnection Customer has no right to operate in parallel, except for optional testing not to exceed two hours, until permission to operate is granted by the Area EPS Operator.

8.4. Interconnection Costs

The Interconnection Customer shall pay for the actual cost of the Interconnection Facilities and Distribution Upgrades along with the Area EPS Operator's cost to commission the proposed DER system. An estimate of the interconnection costs shall be stated in the Uniform Contract or MMIA. The Area EPS Operator shall render the final interconnection cost invoice to the Interconnection Customer within thirty (30) Business Days after the proposed DER system has been commissioned by the Area EPS Operator, or upon the commissioning being waived by the Area EPS Operator. The Interconnection Customer shall make payment to the Area EPS Operator within

twenty-one (21) Business Days of receipt, or as otherwise stated in the Uniform Contract.

The Area EPS Operator does not give any warranty, expressed or implied, as to the adequacy, safety, or other characteristics of any structures, equipment, wires, appliances or devices owned, operated, installed or maintained by the Interconnection Customer, including without limitation the DER and any structures, equipment, wires, appliances or devices not owned, operated or maintained by the Area EPS Operator.

8.5. Authorization for Parallel Operation

The Interconnection Customer shall not operate its DER system in parallel with the Area EPS Operator's Distribution System without prior written authorization from the Area EPS Operator. The Area EPS Operator shall provide such authorization within three (3) Business Days from when the Area EPS Operator receives the Certificate of Completion and notification the Interconnection Customer has complied with all applicable parallel operations requirements. Such authorization shall not be unreasonably withheld, conditioned or delayed.

8.6. Continual Compliance

The Interconnection Customer shall be fully responsible for operating, maintaining, and repairing the DER as required to ensure that it complies at all times with the interconnection standards to which it has been certified. The Interconnection Customer shall also operate its DER system in compliance with the Area EPS Operator's technical requirements as referred to in the executed Uniform Contract or MMIA. The Area EPS Operator may periodically inspect, at its own expense, the operation of DER system as it relates to power quality, thermal limits and reliability. Failure by the Interconnection Customer to remain in compliance with the technical requirements will result in the DER system's disconnection from the Area EPS Operator's Distribution System.

8.7. Disconnection of DER

The Area EPS Operator has the right to disconnect the DER in the event the Interconnection Customer:

- Does not continue to follow and maintain IEEE 1547 settings approved by the Area EPS Operator as indicated by the adopted technical requirements.

- Does not meet all the requirements of the Simplified Process.

- Refuses to sign either the Interconnection Agreement or the Area EPS Operator's Uniform Contract.

The Area EPS Operator may temporarily disconnect the DER upon the following conditions:

- For scheduled outages upon reasonable notice.
- For unscheduled outages or emergency conditions.

- If the DER does not operate in a manner consistent with the Simplified Process.

The Area EPS Operator shall inform the Interconnection Customer in advance of any scheduled disconnections, or as reasonable, after an unscheduled disconnection.

St. Cloud Utility's 220 kW Wastewater Solar Array
St. Cloud, MN

INTERCONNECTION PROCESS

Fast Track Process

ABSTRACT

Information in addition to the "Process Overview" for interconnecting Distributed Energy Resources smaller than 4 megawatts in size that do not qualify for the "Simplified Process."

Contents

1 Applicability 1

1.1. Capacity Limit 1

1.2. Codes, Standards and Certification Requirements 1

2 Application Submission 2

2.1. Fast Track Process Application 2

2.2. Professional Licensed Engineer Signature 2

2.3. Processing Fee 2

2.4. Battery Storage 3

2.5. Site Control 3

3 Application Review 3

3.1. Timelines 3

3.2. Initial Review Screens 4

3.3. Notification of Approval of Application 6

3.4. Failure of Review Screens 6

3.5. Customer Options Meeting 6

4 Supplemental Review 7

4.1. Acceptance of Supplemental Review 7

4.2. Supplemental Review Costs 7

4.3. Supplemental Review Timelines 7

4.4. Supplemental Review Screens 8

4.5. Identification of Construction of Facilities 10

4.6. Supplemental Review Results 10

5 Interconnection Agreement 11

5.1. Uniform Contract 11

5.2. Municipal Minnesota Interconnection Agreement 11

5.3. Completion of Agreement 11

6 Insurance 12

6.1. Insurance Requirements 12

6.2. Self-Insurance 12

6.3. Proof of Insurance 13
7 Timeline Extensions 13
7.1. Reasonable Efforts 13
7.2. Extensions 13
8 Modifications to Application 13
8.1. Procedures 13
8.2. Timelines 14
9 Interconnection 14
9.1. Interconnection Milestones 14
9.2. Metering 15
9.3. Construction 15
9.4. Inspection, Testing and Commissioning 15
9.5. Interconnection Costs 16
9.6. Security of Payment 17
9.7. Non-Warranty 18
9.8. Authorization for Parallel Operation 18
9.9. Continual Compliance 19
9.10. Disconnection of DER 19

1 Applicability

1.1. Capacity Limit

The Fast Track Process is available to an Interconnection Customer proposing to interconnect a Distributed Energy Resource (DER) with the Area EPS Operator's Distribution System if the DER capacity does not exceed the size limits in Table 1.1 and does not qualify for the Simplified Process. The capacity is determined by the aggregated summation of the Nameplate Rating of all components that make up the DER system. Additional information regarding the capacity limits can be seen in Section 6 of the Process Overview document.

Table 1.1. Fast Track Eligibility for DER

Line Voltage	Fast Track Eligibility[1] Regardless of Location	Fast Track Eligibility for certified, inverter-based DER on a Mainline[2] and ≤ 2.5 Electrical Circuit Miles from Substation[3]
< 5 kV	≤ 500 kW	≤ 500 kW
≥ 5 kV and < 15 kV	≤ 1 MW	≤ 2 MW
≥ 15 kV and < 30 kV	≤ 3 MW	≤ 4 MW
≥ 30 kV and ≤ 69 kV	≤ 4 MW	≤ 5 MW

Fast Track eligibility for DERs is determined based upon the generator type, the size of the generator, voltage of the line, and the location of and the type of line at the Point of Common Coupling. All synchronous and induction machines must be no larger than 2 MW to be eligible for Fast Track Process consideration. Fast Track eligibility does not imply or indicate that a DER will pass the engineering screens or be exempt from the proposed DER Interconnection being placed into the Study Process.

1.2. Codes, Standards and Certification Requirements

The Interconnection Customer's proposed DER must meet the codes, standards and certification requirements listed in Section 14 and Section 15 of the Overview Process document. The Area EPS Operator may allow DER systems that do not meet codes, standards and certification only if the DER system design is reviewed and tested and determined that it is safe to operate in parallel with the Distribution System.

---

[1] Synchronous and induction machine eligibility is limited to no more than 2 MW even when line voltage is greater than 15 kV.

[2] For purposes of this table, a Mainline is the three-phase backbone of a circuit. It will typically constitute lines with wire sizes of 4/0 American wire gauge, 266 kcmil, 336.4 kcmil, 397.5 kcmil, 477 kcmil and 795 kcmil.

[3] An Interconnection Customer can determine this information about its proposed interconnection location in advance by requesting a pre-application report described in the Overview Process document.

2 Application Submission

2.1. Fast Track Process Application

The Interconnection Customer shall complete the standard Interconnection Application and submit it to the Area EPS Operator to initialize the Interconnection Process. A completed Interconnection Application will include the following:

- A completed Interconnection Application signed by the Interconnection Customer.
- A non-refundable processing fee indicated in Section 2.3.
- A site layout drawing of the proposed DER system.
- A one-line diagram of the proposed DER system showing the point of common coupling to the Area EPS Operator's Distribution System.
- All equipment manufacturer specification sheets.
- Documentation of site control indicated in Section 2.5.

2.2. Professional Licensed Engineer Signature

The one-line diagram submitted with the Interconnection Application will require a signature from a professional engineer licensed in the State of Minnesota certifying the DER was designed in conformance to the Minnesota Technical Requirements for the following conditions:

- Certified[4] equipment is greater than 250 kW.
- Non-certified equipment is greater than 20 kW.

2.3. Processing Fee

The processing fee will differ for a Fast Track Interconnection Application dependening on the type of equipment utilized as seen in Table 2.1.

[4] Additional information regarding certified equipment is found in Section 14 and Section 15 of the Process Overview document.

Table 2.1. Interconnection Application Process Fee

Equipment Type	Process Fee
Certified System	$100 + $1/kW
Non-Certified System	$100 + $2/kW

2.4. Battery Storage

An inverter-based DER system may include battery storage. DER systems that include battery storage should complete the Energy Storage Application along with the Interconnection Application.

2.5. Site Control

Documentation of site control must be submitted with the Interconnection Application. Site control may be demonstrated by any of the following:

- Ownership of, a leasehold interest in, or a right to develop a site for the purpose of constructing the DER system.
- An option to purchase or acquire a leasehold site for constructing the DER system.
- An exclusivity or other business relationship between the Interconnection Customer and the entity having the right to sell, lease, or grant the Interconnection Customer the right to possess or occupy a site for constructing the DER system.

3 Application Review

3.1. Timelines

The Interconnection Application shall be date- and time-stamped upon initial, and if necessary, resubmission receipt. The Interconnection Customer shall be notified of receipt by the Area EPS Operator within ten (10) Business Days of receipt of the Interconnection Application.

The Area EPS Operator shall notify the Interconnection Customer if the Interconnection Application is deemed incomplete within ten (10) Business Days and provide a written list detailing all information that must be provided to complete the Interconnection Application. The Interconnection Customer has ten (10) Business Days to provide the missing information unless additional time is requested with valid reasons. Failure to submit the requested information within the stated timeline will result in the Interconnection Application being deemed withdrawn. The Area EPS Operator has an

additional five (5) Business Days to review the additionally provided information for completeness.

An Interconnection Application will be deemed complete upon submission to the Area EPS Operator provided all documents, fees and information required with the Interconnection Application adhering to Minnesota Technical Requirements is included. The time- and date- stamp of the completed Interconnection Application shall be accepted as the qualifying date for the purpose of establishing a queue position as described in Section 4.7 in the Overview Process document.

The Area EPS Operator has a total of twenty-five (25) Business Days to complete the Interconnection Application review and submit notice back to the Interconnection Customer stating the proposed DER system may proceed with the interconnection process or a supplemental review offer is to be made or the proposed DER system has been moved into a different process track. The period of time when waiting for the Interconnection Customer to provide missing information is not included in the Area EPS Operator's twenty-five (25) Business Days review timeline.

3.2. Initial Review Screens

The Area EPS Operator shall determine if the DER can be interconnected safely and reliably without the construction of facilities by the Area EPS Operator by using a set of Initial Review Screens. The Initial Review screens include the following engineering screens:

- The proposed DER's Point of Common Coupling must be on a portion of the Area EPS Operator's Distribution System.

- For interconnection of a proposed DER to a radial distribution circuit, the aggregated generation, including the proposed DER, on the circuit shall not exceed 15% of the line section annual peak load as most recently measured or 100% of the substation aggregated minimum load. A line section is that portion of an Area EPS Operator's electric system connected to a customer bounded by automatic sectionalizing devices or the end of the distribution line. The Area EPS Operator may consider 100% of applicable loading (i.e. daytime minimum load for solar), if available, instead of 15% of line section peak load.

- For interconnection of a proposed DER to the load side of network protectors, the proposed DER must utilize an inverter-based equipment package and,

together with the aggregated other inverter-based DERs, shall not exceed the smaller of 5% of a network's maximum load or 50 kW.[5]

- The proposed DER, in aggregation with other DERs on the distribution circuit, shall not contribute more than 10% to the distribution circuit's maximum fault current at the point on the high voltage (primary) level nearest the proposed Point of Common Coupling.

- The proposed DER, in aggregate with other Distributed Energy Resources on the distribution circuit, shall not cause any distribution protective devices and equipment (including, but not limited to, substation breakers, fuse cutouts, and line reclosers), or Interconnection Customer equipment on the system to exceed 87.5% of the short circuit interrupting capability; nor shall the interconnection be proposed for a circuit that already exceeds 87.5% of the short circuit interrupting capability.

- Using the table below, determine the type of interconnection to a primary distribution line. This screen includes a review of the type of electrical service provided to the Interconnecting Customer, including line configuration and the transformer connection to limit the potential for creating over-voltages on the Area EPS Operator's electric power system due to a loss of ground during the operating time of any anti-islanding function.

Table 3.1. Type of Primary Distribution Line Interconnections

Primary Distribution Line Type	Type of Interconnection to Primary Distribution Line	Results
Three-Phase, three wire	Three-phase or single-phase, phase-to-phase	Pass Screen
Three-phase, four wire	Effectively-grounded three-phase or single-phase, line-to-neutral	Pass Screen

- If the proposed DER is to be interconnected on single-phase shared secondary, the aggregate generation capacity on the shared secondary, including the proposed DER, shall not exceed 20 kW or 65% of the transformer nameplate rating.

- If the proposed DER is single-phase and is to be interconnected on a center tap neutral of a 240-volt service, its addition shall not create an imbalance between

[5] Network protectors are protective devices used on secondary networks (spot and grid networks) to automatically disconnect associated transformers when reverse power flow occurs. Secondary networks are most often used in densely populated downtown areas.

the two sides of the 240-volt service of more than 20% of the nameplate rating of the service transformer.

The technical screens listed shall not preclude the Area EPS Operator from using tools that perform screening functions using different methodologies provided the analysis is targeted to maintain the voltage, thermal and protection objectives as the listed screen.

3.3. Notification of Approval of Application

Provided the Interconnection Application passes the initial screens, or if the proposed interconnection fails the screens but the Area EPS Operator determines that the DER may nevertheless be interconnected consistent with safety, reliability and power quality standards, the Area EPS Operator shall provide notice to the Interconnection Customer that their Interconnection Application has been approved. The Area EPS Operator shall provide the Interconnection Customer with an Interconnection Agreement as outlined in Section 5.

3.4. Failure of Review Screens

If the proposed interconnection fails the screens, and the Area EPS Operator does not or cannot determine from the Initial Review that the DER may nevertheless be interconnected consistent with safety, reliability, and power quality standards, unless the Interconnection Customer is willing to consider minor modifications or further study, the Area EPS Operator shall provide the Interconnection Customer the opportunity to attend a customer options meeting.

The Area EPS Operator shall notify the Interconnection Customer of the determination and provide copies of all directly pertinent data and analyses underlying its conclusion, subject to confidentiality provisions in Section 12.1 of the Overview Process document.

3.5. Customer Options Meeting

Within ten (10) Business Days of the Area EPS Operator's notification to the Interconnection Customer of the proposed interconnection's failure of the engineering screens, the Area EPS Operator and the Interconnection Customer shall schedule a customer options meeting to review possible facility modification, screen analysis and related results to determine what further steps are needed to permit the DER to be interconnected safely and reliably to the Distribution System. At the customer options meeting the Area EPS Operator shall:

- Offer to perform a supplemental review in accordance with Section 4 and provide a non-binding good faith estimate of the cost of such review; or

- Obtain the Interconnection Customer's agreement to continue evaluating the Interconnection Application under the Study Process track.

4 Supplemental Review

4.1. Acceptance of Supplemental Review

To accept the offer of a supplemental review, the Interconnection Customer shall agree in writing and submit a deposit for the estimated costs of the supplemental review in the amount of the Area EPS Operator's good faith estimate of the costs of such review within fifteen (15) Business Days once the supplemental review offer is made by the Area EPS Operator. If the written agreement and deposit have not been received by the Area EPS Operator within that timeframe, the Interconnection Application can only continue being evaluated under the Study Process or it can be withdrawn by the Interconnection Customer.

The Interconnection Customer may specify within the written agreement the order in which the Area EPS Operator will complete the supplemental review screens listed in Section 4.4.

4.2. Supplemental Review Costs

The Interconnection Customer shall be responsible for the Area EPS Operator's actual costs for conducting the supplemental review. The Interconnection Customer shall pay any review costs that exceed the deposit within twenty (20) Business Days of receipt of the invoice or resolution of any dispute. If the deposit exceeds the invoiced costs, the Area EPS Operator will return such excess within twenty (20) Business Days of the invoice without interest.

4.3. Supplemental Review Timelines

Within thirty (30) Business Days following the receipt of the deposit for a supplemental review, the Area EPS Operator shall:

- Perform the supplemental review using the screens in Section 4.4.
- Notify the Interconnection Customer of the results in writing.
- Include copies of the Area EPS Operator's analysis under the screens with the written notification.

Unless the Interconnection Customer provides instruction for how to respond to a failure of any of the supplemental review screens in the written acceptance of supplemental review, the Area EPS Operator shall notify the Interconnection Customer within two (2) Business Days if a supplemental review screen is failed or if the Area EPS Operator is unable to perform the supplemental review screen. The Area EPS Operator shall then obtain the Interconnection Customer's permission to either:

- Continue evaluating the proposed interconnection using the supplemental review screens in Section 4.4.
- Terminate the supplemental review and continue evaluating the Interconnection Application in the Study Process track.
- Terminate the supplemental review upon withdrawal of the Interconnection Application by the Interconnection Customer.

The Interconnection Customer shall respond with its choice within five (5) Business Days of notification from the Area EPS Operator.

4.4. Supplemental Review Screens

The three supplemental review screens are the Minimum Load screen, the Voltage and Power Quality screen and the Safety and Reliability screen.

4.4.1. Minimum Load Screen

The aggregate DER capacity on the line section is less than 100% of the minimum load for all line sections bounded by automatic sectionalizing devices upstream of the proposed DER. If minimum load data is not available, or cannot be calculated, estimated or determined, the Area EPS Operator shall include the reason(s) that it is unable to calculate, estimate or determine minimum load in its supplemental review results notification under Section 4.3. The line section minimum load data shall include onsite load but not station service load served by the proposed DER in this screen.

The type of generation used by the proposed DER will be considered when calculating, estimating, or determining circuit or line section minimum load relevant for the application of this screen. Solar photovoltaic (PV) generation systems with no battery storage use daytime minimum load (i.e., 10 a.m. to 4 p.m. for fixed panel systems and 8 a.m. to 6 p.m. for PV systems utilizing tracking systems), while all other generation uses absolute minimum load.

When this screen is being applied to a DER that serves some station service load, only the net injection into the Area EPS Operator's electric system will be considered as part of the aggregate generation.

The Area EPS Operator will not consider as part of the aggregate generation for purposes of this screen DER capacity known to be already reflected in the minimum load data.

4.4.2. Voltage and Power Quality Screen

In aggregate with existing generation on the line section the following conditions shall be met for the screen to be passed:

- The voltage regulation on the line section can be maintained in compliance with relevant requirements under all system conditions.
- The voltage fluctuation is within acceptable limits as defined by Institute of Electrical and Electronics Engineers (IEEE) Standard 1453, or utility practice similar to IEEE Standard 1453.
- The harmonic levels meet IEEE Standard 519 limits.

4.4.3. Safety and Reliability Screen

The location of the proposed DER and the aggregate generation capacity on the line section do not create impacts to safety or reliability that cannot be adequately addressed without application of the Study Process. The Area EPS Operator shall give due consideration to the following and other factors in determining potential impacts to safety and reliability in applying this screen.

- Whether the line section has significant minimum loading levels dominated by a small number of customers (e.g., several large commercial customers).
- Whether the loading along the line section is uniform or even.
- Whether the proposed DER is located in close proximity to the substation (i.e., less than 2.5 electrical circuit miles), and whether the line section from the substation to the Point of Common Coupling is a main line rated for normal and emergency ampacity.

- Whether the proposed DER incorporates a time delay function to prevent reconnection of the generator to the system until system voltage and frequency are within normal limits for a prescribed time.

- Whether operational flexibility is reduced by the proposed DER, such that transfer of the line section(s) of the DER to a neighboring distribution circuit/substation may trigger overloads or voltage issues.

- Whether the proposed DER employs equipment or systems certified by a recognized standards organization to address technical issues such as, but not limited to, islanding, reverse power flow, or voltage quality.

4.5. Identification of Construction of Facilities

If the proposed interconnection requires the construction of any distribution or transmission facilities, the Area EPS Operator shall notify the Interconnection Customer of the requirement when it provides the supplemental review results. The Area EPS Operator may include a non-binding good faith estimate to construct the facilities included with the supplemental review results. In lieu of providing a non-binding good faith estimate to construct the necessary facilities, the Area EPS Operator may require the proposed interconnection to move to the Study Process for a facility study instead.

Upon being presented with either the non-binding good faith estimate or the requirement for a facility study, the Interconnection Customer has five (5) Business Days to inform the Area EPS Operator to proceed with the proposed interconnection or withdraw the Interconnection Application.

4.6. Supplemental Review Results

If the proposed interconnection passes the supplemental review screens in Section 4.4 and does not require construction of distribution or transmission facilities by the Area EPS on its own system, the Area EPS Operator shall provide an executable Interconnection Agreement within five (5) Business Days after the supplemental review screens are completed. Information regarding the Interconnection Agreement is detailed in Section 5.

If the proposed interconnection passes the supplemental review screens in Section 4.4 and the Interconnection Customer agrees to the non-binding good faith estimate of construction of any distribution or transmission facilities by the Area EPS Operator, the Area EPS Operator shall provide an executable Interconnection Agreement within twenty (20) Business Days. Included with the Interconnection Agreement shall be non-

binding good faith estimate of construction costs and a construction schedule for the facilities. Information regarding the Interconnection Agreement is detailed in Section 5.

If the proposed interconnection does not pass the supplemental review screens in Section 4.4 the Area EPS Operator shall provide the Interconnection Customer with the option of commencing the Study Process. The Interconnection Customer shall notify the Area EPS Operator within fifteen (15) Business Days if they wish to proceed with the Study Process to retain their queue position or the Interconnection Application will be deemed withdrawn.

5 Interconnection Agreement

5.1. Uniform Contract

For a proposed interconnection that meets the conditions of being classified as a qualifying facility less than 40 kW, the Area EPS Operator shall provide the Interconnection Customer with an executable copy of the Area EPS Operator's Uniform Contract for Cogeneration and Small Power Production Facilities (Uniform Contract).

5.2. Municipal Minnesota Interconnection Agreement

For proposed interconnections that do not meet the conditions of being classified as a qualifying facility less than 40 kW or if requested by the Interconnection Customer in lieu of signing the Uniform Contract, the Area EPS Operator shall provide an executable copy of the Municipal Minnesota Interconnection Agreement (MMIA).

5.3. Completion of Agreement

The Interconnection Customer must return a signed Interconnection Agreement at least thirty (30) Business Days prior to the requested in-service date of the proposed DER. The Area EPS Operator shall sign and return a copy of the fully executed Interconnection Agreement back to the Interconnection Customer.

The Interconnection Customer may update the requested in-service date submitted on the Interconnection Application to a date thirty (30) Business Days or later from the date on which the Interconnection Customer submits a signed Interconnection Agreement and payment if required unless the Area EPS Operator agrees to an earlier date.

Upon receipt of the signed Interconnection Agreement, the Area EPS Operator may schedule appropriate metering replacements and construction of facilities, if necessary.

6 Insurance

6.1. Insurance Requirements

At minimum, the Interconnection Customer shall maintain, for the duration the DER system is interconnected to the Area EPS Operator's Distribution System, general liability insurance from a qualified insurance agency with a B+ or better rating by "Best" with a combined single limit of not less than those described in Table 6.1. Such general liability insurance shall include coverage against claims for damages resulting from (i) bodily injury, including wrongful death; and (ii) property damage arising out of the Interconnection Customer's ownership and/or operation of the DER under this agreement. Evidence of the insurance shall state that coverage provided is primary and is not excess to or contributing with any insurance or self-insurance by the Area EPS Operator.

Table 6.1. Liability Insurance Requirements

DER System Size	Liability Insurance Requirement
< 40 kW AC	$300,000
≥ 40 kW AC and < 250 kW AC	$1,000,000
≥ 250 kW AC and < 5 MW AC	$2,000,000
≥ 5 MW AC	$3,000,000

For all proposed DER systems, except those that are qualifying systems less than 40 kW AC, the general liability insurance shall, by endorsement to the policy or polices:

- Include the Area EPS Operator as additionally insured.
- Contain severability of interest clause or cross-liability clause.
- Provide that the Area EPS Operator shall not by reason incur liability to the insurance carrier for the payment of premiums for such insurance if the Area EPS Operator is included as an additionally insured.

6.2. Self-Insurance

The Interconnection Customer may choose to be self-insured provided there is an established record of self-insurance. The Interconnection Customer shall supply the Area EPS Operator at least 20 days prior to the date of initial operation, evidence of an acceptable plan to self-insure to a level of coverage equivalent to that required in Section 6.1. Failure of the Interconnection Customer or the Area EPS Operator to enforce the minimum levels of insurance does not relieve the Interconnection Customer from maintaining such levels of insurance or relieve the Interconnection Customer of any liability.

6.3. Proof of Insurance

The Interconnection Customer shall furnish the required insurance certificates and endorsements to the Area EPS Operator prior to the initial operation of the DER. A copy of the Declaration page of the Homeowner's insurance policy is a common example of an insurance certificate. Thereafter, the Area EPS Operator shall have the right to periodically inspect or obtain a copy of the original policy or polices of insurance. Additionally, the Area EPS Operator may request to be additionally listed as an interested third part on the insurance certificates and endorsements for qualifying facilities less than 40 kW AC to meet the right to periodically obtain a copy of the policy or policies of insurance.

7 Timeline Extensions

7.1. Reasonable Efforts

The Area EPS Operator shall make Reasonable Efforts to meet all time frames provided in these procedures. If the Area EPS Operator cannot meet a deadline provided herein, it must notify the Interconnection Customer in writing within three (3) Business Days after the deadline to explain the reason for the failure to meet the deadline and provide an estimated time by which it will complete the applicable interconnection procedure in the process.

7.2. Extensions

For applicable time frames described in these procedures, the Interconnection Customer may request in writing one extension equivalent to half of the time originally allotted (e.g., ten (10) Business Days for a twenty (20) Business Days original time frame) which the Area EPS Operator may not unreasonably refuse. No further extensions for the applicable time frame shall be granted absent a Force Majeure Event or other similarly extraordinary circumstance.

8 Modifications to Application

8.1. Procedures

At any time after the Interconnection Application is deemed complete, the Interconnection Customer or the Area EPS Operator may identify modifications to the proposed DER system that may improve costs and benefits (including reliability) of the proposed DER system and the ability for the Area EPS Operator to accommodate the proposed DER system. The Interconnection Customer shall submit to the Area EPS Operator in writing all proposed modifications to any information provided in the Interconnection Application. The Area EPS Operator cannot unilaterally modify the Interconnection Application.

8.2. Timelines

Within ten (10) Business Days of receipt of the proposed modification, the Area EPS Operator shall evaluate whether the proposed modification to the Interconnection Application constitutes a Material Modification. The definition in the Section 13 Glossary of the Process Overview document includes examples of what does and does not constitute a Material Modification.

The Area EPS Operator shall notify the Interconnection Customer in writing of the final determination of the proposed modification. For proposed modifications that are determined to be a Material Modification the Interconnection Customer may choose to either: 1) withdraw the proposed modification; or 2) proceed with a new Interconnection Application. The Interconnection Customer shall provide its determination in writing to the Area EPS Operator within ten (10) Business Days after being provided the Material Modification determination. If the Interconnection Customer does not provide its determination within the timeline, the Interconnection Application shall be considered withdrawn.

If the proposed modification is not determined to be a Material Modification, then the Area EPS Operator shall notify the Interconnection Customer in writing that the modification has been accepted and the Interconnection Customer shall retain its eligibility for interconnection, including its place in the queue.

9 Interconnection

9.1. Interconnection Milestones

For DER systems that are not a qualifying facility less than 40 kW AC, the Interconnection Customer and the Area EPS Operator shall agree on milestones for which each Party is responsible and list them in Attachment IV of the MMIA. To the greatest extent possible, the Parties will identify all design, procurement, installation and construction requirements associated with the project, and clear associated timelines, at the beginning of the design, procurement, installation and construction phase, or as early within the process as possible.

A Party's obligation under this provision may be extended by agreement. If a Party anticipates that it will be unable to meet a milestone for any reason other than a Force Majeure Event, it shall immediately notify the other Party of the reason(s) for not meeting the milestone, propose the earliest reasonable alternative date in which this and future milestones will be met, and request appropriate amendments to the MMIA and its attachments. The Party affected by the failure to meet a milestone shall not unreasonably withhold agreement to such an amendment unless:

- The Party will suffer significant uncompensated economic or operational harm from the delay, or

- Attainment of the same milestone has previously been delayed, or

- The Party has reason to believe the delay in meeting the milestone is intentional or unwarranted notwithstanding the circumstance explained by the Party proposing the amendment.

If the Party affected by the failure to meet a milestone disputes the proposed extension, the affected Party may pursue dispute resolution as described in the Overview Process document.

9.2. Metering

Any metering requirements necessitated by the use of the DER system shall be installed at the Interconnection Customer's expense. The metering requirement costs will be included in the final invoice of interconnection costs to the Interconnection Customer. The Interconnection Customer is also responsible for metering replacement costs not covered in the Interconnection Customer's general customer charge. The Area EPS Operator may charge Interconnection Customers an ongoing metering-related charge for an estimate of ongoing metering-related costs specifically demonstrated.

9.3. Construction

The Interconnection Customer may proceed to construct (including operational testing not to exceed two hours) the DER system when the Area EPS Operator has approved the Interconnection Application. Upon receipt of a signed Uniform Contract or Interconnection Agreement the Area EPS Operator shall schedule and execute appropriate construction of facilities.

9.4. Inspection, Testing and Commissioning

Upon completing construction of the DER system, the Interconnection Customer will cause the DER system to be inspected or otherwise certified by the appropriate local electrical wiring inspector with jurisdiction. The Interconnection Customer shall then arrange for the inspection and testing of the DER system and the Customer's Interconnection Facilities prior to interconnection pursuant to Minnesota Interconnection Technical Requirements. Commissioning tests of the Interconnection Customer's installed equipment shall be performed pursuant to applicable codes and standards of Minnesota's Technical Requirements and Section 15 in the Overview Process.

The Interconnection Customer shall notify the Area EPS Operator of testing and inspection no fewer than five (5) Business Days in advance, or as may be agreed to by the Parties. The Interconnection Customer shall provide to the Area EPS Operator a testing procedure that will be followed on the day of testing and inspection no fewer than ten (10) Business Days prior to the testing and inspection date. The testing procedure should include tests and/or inspections to confirm the DER system will meet the technical requirements of interconnection. The Area EPS Operator shall review the testing procedure for completeness and shall notify the Interconnection Customer if the testing procedure fails to address components of the technical requirements for interconnection.

The Area EPS Operator shall send qualified personnel to the DER site to inspect the interconnection and witness the testing. Testing and inspection shall occur on a Business Day at a mutually agreed upon date and time. The Area EPS Operator may waive the right to witness the testing.

9.5. Interconnection Costs

9.4.1 Estimation of Interconnection Costs

The Interconnection Customer shall pay for the actual cost of the Interconnection Facilities and Distribution Upgrades along with the Area EPS Operator's cost to commission the proposed DER system. An estimate of the interconnection costs shall be stated in the Uniform Contract or in the MMIA in Attachment II as a detailed itemization of such costs. If Network Upgrades are required, the actual cost of the Network Upgrades, including overheads, shall be borne by the Interconnection Customer pursuant to the Transmission Provider and associated agreements.

9.4.2 Progressive Payment of Interconnection Costs

The Area EPS Operator shall bill the Interconnection Customer for the design, engineering, construction and procurement costs of the Interconnection Facilities and Upgrades described in the "MMIA" or Uniform Contract Attachment II on a monthly basis or other basis agreed upon by both Parties in the "MMIA" or Uniform Contract. The Interconnection Customer shall pay each bill within twenty-one (21) Business Days or as agreed to in the MMIA.

9.4.3 Final Accounting of Interconnection Facilities and Upgrade Costs

If distribution or transmission facilities required upgrades to accommodate the proposed DER system, the Area EPS Operator shall render the final interconnection cost invoice to the Interconnection Customer within eighty (80) Business Days (approximately four calendar months) of completing the

construction and installation of the Area EPS Operator's Interconnection Facility and Upgrades. The Area EPS Operator shall provide the Interconnection Customer with a final accounting report identifying the difference between the actual Interconnection Customer's cost responsibility and the Interconnection Customer's previous aggregate payments to the Area EPS Operator for the specific DER system interconnection. Upon the final accounting submitted to the Interconnection Customer, the balance between the actual cost and previously aggregated payments shall be paid to the Area EPS Operator within twenty (20) Business Days. If the balance between the actual cost and previously aggregated payments is a credit, the Area EPS Operator shall refund the Interconnection Customer within twenty (20) Business Days.

9.4.4 Final Interconnection Costs without Facilities and Upgrades Needed

Within thirty (30) Business Days the final invoice for the interconnection costs shall be rendered to the Interconnection Customer once the proposed DER system has been commissioned by the Area EPS Operator, or upon the commissioning being waived by the Area EPS Operator. The Interconnection Customer shall make payment to the Area EPS Operator within twenty-one (21) Business Days of receipt, or as otherwise stated in the Uniform Contract or MMIA.

9.6. Security of Payment

At the option of the Area EPS Operator, either the "Traditional Security" or the "Modified Security" method shall be used for assurance of payment of interconnection cost.

Under the Traditional Security method, the Interconnection Customer shall provide reasonable, adequate assurances of credit, including a letter of credit or personal guaranty of payment and performance from a creditworthy entity acceptable under the Area EPS Operator credit policy. The letter of credit shall also include procedures for the unpaid balance of the estimated amount shown in the Interconnection Agreement for the totality of all anticipated work or expense incurred by the Area EPS Operator associated with the Interconnection Application. The payment for these estimated costs shall be as follows:

- 1/3 of estimated costs shall be due no later than when the Interconnection Customer signs the Interconnection Agreement.

- An additional 1/3 of estimated costs shall be due prior to initial energization of the DER with the Area EPS Operator.

- Remainder of actual costs, incurred by Area EPS Operator, shall be due within thirty (30) Business Days from the date the bill is mailed by the Area EPS Operator after project completion.

Under the Modified Security method, at least twenty (20) Business Days prior to the commencement of the design, procurement, installation, or construction of a discrete portion of the Area EPS Operator's Interconnection Facilities and Upgrades, the Interconnection Customer shall provide the Area EPS Operator, at the Interconnection Customer's option, a guaranty, letter of credit or other form of security that is reasonably acceptable to the Area EPS Operator and is consistent with the Minnesota Uniform Commercial Code. Such security for payment shall be in an amount sufficient to cover the costs for constructing, designing, procuring, and installing the applicable portion of the Area EPS Operator's Interconnection Facilities and Upgrades and shall be reduced on a dollar-for-dollar basis for payments made to the Area EPS Operator under the Interconnection Agreement during its term.

The guaranty must be made by an entity that meets the creditworthiness requirements of the Area EPS Operator and contain terms and conditions that guarantee payment of any amount that may be due from the Interconnection Customer, up to an agreed-to maximum amount.

The letter of credit must be issued by a financial institution or insurer reasonably acceptable to the Area EPS Operator and must specify a reasonable expiration date not sooner than sixty (60) Business Days (three calendar months) after the due date of the final accounting report and bill described in Section 9.5

9.7. Non-Warranty

Area EPS Operator does not give any warranty, expressed or implied, as to the adequacy, safety, or other characteristics of any structures, equipment, wires, appliances or devices owned, operated, installed or maintained by the Interconnection Customer, including without limitation the DER and any structures, equipment, wires, appliances or devices not owned, operated or maintained by the Area EPS Operator. The Area EPS Operator does not guarantee uninterrupted power supply to the DER and will operate the Distribution System with the same reliability standards for the entire customer base.

9.8. Authorization for Parallel Operation

The Interconnection Customer shall not operate its DER system in parallel with the Area EPS Operator's Distribution System without prior written authorization from the

Area EPS Operator. The Area EPS Operator shall provide such authorization within three (3) Business Days from when the Area EPS Operator receives notification that the Interconnection Customer has complied with all applicable parallel operations requirements and commissioning has been successfully completed. Such authorization shall not be unreasonably withheld, conditioned or delayed.

9.9. Continual Compliance

The Interconnection Customer shall be fully responsible to operate, maintain, and repair the DER as required to ensure that it complies at all times with the interconnection standards to which it has been certified. The Interconnection Customer shall also operate its DER system in compliance with the Area EPS Operator's technical requirements referred to in the executed Interconnection Agreement. The Area EPS Operator may periodically inspect, at its own expense, the operation of the DER system as it relates to power quality, thermal limits and reliability. Failure by the Interconnection Customer to remain in compliance with the technical requirements will result in the disconnection of the DER system from the Area EPS Operator's Distribution System.

9.10. Disconnection of DER

The Area EPS Operator has the right to disconnect the DER in the event of the following:

- Does not continue to follow and maintain IEEE 1547 settings approved by the Area EPS Operator as indicated by the adopted technical requirements.
- Does not meet all the requirements of the Fast Track Process.
- Refuses to sign either the MMIA or the Area EPS Operator's Uniform Contract.

The Area EPS Operator may temporarily disconnect the DER upon the following conditions:

- For scheduled outages upon reasonable notice.
- For unscheduled outages or emergency conditions.
- If the DER does not operate in the manner consistent with the Fast Track Process.

The Area EPS Operator shall inform the Interconnection Customer in advance of any scheduled disconnections, or as reasonable, after an unscheduled disconnection.

Southern Minnesota Municipal Power Agency's
5 MW Lemond Solar Station
Owatonna, MN

INTERCONNECTION PROCESS

Study Process

ABSTRACT

Information in addition to the "Process Overview" for interconnecting to the utility distribution system Distributed Energy Resources larger than 4 megawatts in size or in need of additional studies.

Contents

1 Applicability 1

1.1. Applicability 1

1.2. Codes, Standards and Certification Requirements 1

2 Application Submission 1

2.1. Initial Interconnection Application for the Study Process 1

2.2. Professional Licensed Engineer Signature 2

2.3. Battery Storage 2

2.4. Site Control 2

2.5. Interconnection Applications from Other Processes 2

3 Initial Steps 3

3.1. Completeness Review and Queue Position 3

3.2. Scoping Meeting 3

4 System Impact Study 4

4.1. Electric System Impacts 4

4.2. System Impact Study Agreement 4

4.3. System Impact Study Costs 4

4.4. System Impact Study Timelines 4

5 Transmission System Impact Study 5

5.1. Transmission System Impacts 5

5.2. Transmission System Impact Study Timelines 6

5.3. Regional Transmission Operator Jurisdiction 6

6 Facilities Study 6

6.1. Construction of Facilities 6

6.2. Facilities Study Agreement 6

6.3. Facilities Study Timeline 7

6.4. Identification of Construction of Facilities 7

6.5. Facilities Study Report Timeline 8

7 Interconnection Agreement 9

7.1. Uniform Contract 9

7.2. Municipal Minnesota Interconnection Agreement 9
7.3. Completion of Agreement 9
8 Insurance 10
8.1. Insurance Requirements 10
8.2. Self-Insurance 10
8.3. Proof of Insurance 11
9 Timeline Extensions 11
9.1. Reasonable Efforts 11
9.2. Extensions 11
10 Modifications to Application 11
10.1. Procedures 11
10.2. Timelines 12
11 Interconnection 12
11.1. Interconnection Milestones 12
11.2. Metering 13
11.3. Inspection, Testing and Commissioning 13
11.4. Interconnection Costs 14
11.5. Security of Payment 15
11.6. Non-Warranty 16
11.7. Authorization for Parallel Operation 16
11.8. Continual Compliance 17
11.9. Disconnection of DER 17

1 Applicability

1.1. Applicability

The Study Process is applicable to an Interconnection Customer proposing to interconnect a Distributed Energy Resource (DER) with the Area Electrical Power System (Area EPS) Operator's Distribution System, if the DER capacity is larger than 4 MW or is identified through the engineering screening process to need additional studies.

The majority of proposed DER interconnections will initially apply for interconnection under the Simplified or Fast Track Processes. Initial and supplemental screening results are to be considered throughout the Study Process.

1.2. Codes, Standards and Certification Requirements

The Interconnection Customer's proposed DER must meet the codes, standards and certification requirements listed in Section 13, 14 and Section 15 of the Process Overview document. The Area EPS Operator may allow DER systems that do not meet codes, standards and certification only if the DER system design is reviewed, tested and determined to be safe to operate in parallel with the Distribution System.

2 Application Submission

2.1. Initial Interconnection Application for the Study Process

For proposed DER interconnections that are not initially applied for under the Fast Track Process, the Interconnection Customer shall complete the Standard Interconnection Application and submit it to the Area EPS Operator to initiate the Interconnection Process. A completed Interconnection Application will include the following:

- A completed Interconnection Application signed by the Interconnection Customer.
- A process fee not to exceed $1,000, plus $2.00 per kW, toward the deposit of the study(s) indicated in Section 4.
- A site layout drawing of the proposed DER system.
- A one-line diagram of the proposed DER system showing the Point of Common Coupling to the Area EPS Operator's Distribution System.
- All equipment manufacturer specification sheets.
- Documentation of site control as indicated in Section 2.4.

2.2. Professional Licensed Engineer Signature

The one-line diagram submitted with the Interconnection Application will require a signature from a professional engineer licensed in the State of Minnesota certifying the DER was designed in conformance to the Minnesota Technical Requirements for the following conditions:

- Certified[1] equipment is greater than 250 kW.
- Non-certified equipment is greater than 20 kW.

2.3. Battery Storage

An inverter-based DER system may include battery storage. DER systems that include battery storage should complete the Energy Storage Application along with the Interconnection Application.

2.4. Site Control

Documentation of site control must be submitted with the Interconnection Application. Site control may be demonstrated by any of the following:

- Ownership of, a leasehold interest in, or a right to develop a site for the purpose of constructing the DER system;
- An option to purchase or lease a site for constructing the DER system;
- An exclusivity or other business relationship between the Interconnection Customer and the entity having the right to sell, lease, or grant the Interconnection Customer the right to possess or occupy a site for constructing the DER system.

2.5. Interconnection Applications from Other Processes

Some Interconnection Applications submitted under the Fast Track Process may be moved into the Study Process due to issues with the DER interconnection identified by engineering screens. An Area EPS Operator cannot request a new Interconnection Application submission if the Interconnection Application has already been submitted through the Fast Track Process. The Interconnection Customer who had already paid a processing fee for the Fast Track Process is still responsible to make a deposit toward the applicable studies address in Section 4, 5 and 6, but does not need to submit an additional processing fee.

---

[1] Additional information regarding certified equipment is found in Sections 14 and 15 of the Process Overview document.

3 Initial Steps

3.1. Completeness Review and Queue Position

The Interconnection Application originally submitted under the Study Process shall be date- and time-stamped upon initial receipt, and if necessary, resubmission receipt. The Interconnection Customer shall be notified of receipt by the Area EPS Operator within ten (10) Business Days after receipt.

The Area EPS Operator shall notify the Interconnection Customer, within ten (10) Business Days, if the Interconnection Application is deemed incomplete, and provide a written list detailing all information that must be provided to complete the Interconnection Application. The Interconnection Customer has ten (10) Business Days, to provide the missing information, unless additional time is requested with a valid reason. Failure to submit the requested information, within the stated timeline, will result in the Interconnection Application being deemed withdrawn. The Area EPS Operator has an additional five (5) Business Days to review the additionally provided information for completeness.

An Interconnection Application will be deemed complete upon submission to the Area EPS Operator, provided all documents, fees and information required with the Interconnection Application, adhering to Minnesota Technical Requirements, is included. The date- and time-stamp of the completed Interconnection Application shall be accepted as the qualifying date for the purpose of establishing a queue position, as described in Section 4.7 of the Overview Process document.

Interconnection Applications already screened in the Simplified Process or Fast Track Process shall retain their original queue position in the Study Process provided all applicable timelines were met.

3.2. Scoping Meeting

A scoping meeting shall be held within ten (10) Business Days after the Interconnection Application submitted under the Study Process is deemed complete. For Interconnection Applications that were submitted under or put through the Fast Track Process, the scoping meeting will occur within ten (10) Business Days after the Interconnection Customer has elected to continue with the Study Process. The scoping meeting timeline may be extended upon mutual agreement of both Parties. The scoping meeting may also be omitted by mutual agreement.

The purpose of the scoping meeting is to discuss the Interconnection Application and review existing study results relevant to the Interconnection Application. The Parties shall further discuss whether the Area EPS Operator should perform a System Impact

Study or Studies, or proceed directly to a Facilities Study or an Interconnection Agreement. If the Area EPS Operator determines there is no potential for Transmission System or Distribution System adverse system impacts, the Interconnection Application shall proceed directly to a Facilities Study or an executable Interconnection Agreement, as agreed to by the Parties.

4 System Impact Study

4.1. Electric System Impacts

A System Impact Study shall identify and detail the electric system impacts that would result if the proposed DER(s) were interconnected without project modifications or electric system modifications. The System Impact Study is also to study the potential impacts, including but not limited to, those identified in the scoping meeting. A System Impact Study shall evaluate the impacts of the proposed interconnection on the reliability of the electric system.

4.2. System Impact Study Agreement

If the Parties agree at the scoping meeting that a System Impact Study should be performed, the Area EPS Operator shall provide the Interconnection Customer a System Impact Study Agreement, not later than five (5) Business Days after the scoping meeting. If the scoping meeting was omitted by mutual agreement, the Area EPS Operator shall provide the Interconnection Customer a System Impact Study Agreement within ten (10) Business Days after the Interconnection Customer waives the scoping meeting.

The System Impact Study Agreement shall include an outline of the scope of the study and a non-binding good faith estimate of the cost to perform the study. If applicable, the System Impact Study Agreement shall list any additional and reasonable technical data on the DER needed to perform the study. The scope and cost responsibilities are to be described in the System Impact Study Agreement.

4.3. System Impact Study Costs

A deposit of the good faith estimated cost for each System Impact Study shall be provided by the Interconnection Customer with the return of a signed System Impact Study Agreement.

4.4. System Impact Study Timelines

Both the Area EPS Operator and the Interconnection Customer has timeline responsibilities under the System Impact Study.

4.4.1. Interconnection Customer Timelines

In order to remain in consideration for interconnection, an Interconnection Customer who has requested a System Impact Study shall meet the following conditions within twenty (20) Business Days of being provided a System Impact Study Agreement:

- Return a signed System Impact Study Agreement.
- Provide to the Area EPS Operator any requested additional and reasonable technical data on the DER needed to perform the System Impact Study.
- Pay the required study deposit.

Upon the Interconnection Customer's request, the Area EPS Operator shall grant a time frame extension as described in Section 9.29.2, if additional technical data is requested.

4.4.2 Area EPS Operator Timelines

A System Impact Study shall be completed within thirty (30) Business Days after the System Impact Study Agreement has been signed by both Parties and delivered with the deposit and requested technical information to the Area EPS Operator. The results of the System Impact Study shall be delivered to the Interconnection Customer within five (5) Business Days of completion of the System Impact Study. Upon request, the Area EPS Operator shall provide the Interconnection Customer supporting documentation developed in the preparation of the System Impact Study, subjected to confidentiality arrangements consistent with Section 12.1 of the Overview Process and terms of the System Impact Study Agreement.

5 Transmission System Impact Study

5.1. Transmission System Impacts

In instances where the System Impact Study shows potential for Transmission System adverse system impacts, the Area EPS Operator shall contact the appropriate Transmission Provider within five (5) Business Days following the identification of such impacts. The Area EPS Operator shall coordinate with the Area EPS Operator's Transmission Provider to have the necessary studies to determine if the DER causes any adverse transmission impacts. The appropriate Transmission Provider shall provide a Transmission System Impact Study Agreement for the Interconnection Customer. Included in the Transmission System Impact Study Agreement will be a non-binding,

good faith estimate of cost for the study, along with a scope outline of the study and any additional technical data required to complete the Transmission System Impact Study.

5.2. Transmission System Impact Study Timelines

In order to remain in consideration for interconnection, an Interconnection Customer must return the executed Transmission System Impact Study Agreement, along with the study deposit, within fifteen (15) Business Days. The Transmission System Impact Study shall be completed and the results provided to the Interconnection Customer in as timely a manner as possible, after the Transmission System Impact Study Agreement is signed by the Parties. The Area EPS Operator shall be responsible for coordination with the Transmission Provider as needed. Affected Systems shall participate in the study and provide all information necessary to prepare the study.

5.3. Regional Transmission Operator Jurisdiction

In certain circumstances the Transmission Provider may not be able to study a proposed DER system if there is a possible affect to the bulk Transmission System. In these situations, the Area EPS Operator will coordinate with the Transmission Provider to inform the Interconnection Customer that the proposed DER system will need to follow the Regional Transmission Operator's interconnection process. For most of Minnesota, the Regional Transmission Operator is Midcontinent Independent System Operator (MISO).

6 Facilities Study

6.1. Construction of Facilities

If construction of facilities is required, a Facility Study may be necessary to specify and estimate the cost of the equipment, engineering, procurement and construction work. A Facility Study is identified by an Initial Review, Supplemental Review or the Study Process to provide interconnection and interoperability of the DER with the Area EPS Operator's Distribution System as required by Minnesota Technical Requirements. At the determination of the Area EPS Operator, Interconnection Applications reviewed in the Simplified Process or the Fast Track Process that require construction of facilities may forgo a Facilities Study.

6.2. Facilities Study Agreement

The Area EPS Operator shall provide the Interconnection Customer a Facilities Study Agreement either:

- in tandem with the results of the Interconnection Customer's System Impact Study, or

- in tandem with a Transmission System Impact Study, or

- if no System Impact Study is required, within five (5) Business Days after the scoping meeting, or

- within ten (10) Business Days after the Interconnection Application is deemed complete and approved through the Simplified Process or Fast Track Process.

The Facilities Study Agreement shall be accompanied by an outline of the scope of the study and a non-binding good faith estimate of the cost to perform the Facilities Study. The scope of and cost responsibilities for the Facilities Study are to be described in the Facilities Study Agreement. A deposit of the good faith estimated costs for the Facilities Study shall be provided by the Interconnection Customer at the time it returns the Facilities Study Agreement.

6.3. Facilities Study Timeline

In order to remain under consideration for interconnection, the Interconnection Customer must return the executed Facilities Study Agreement and pay the required study deposit within fifteen (15) Business Days.

6.4. Identification of Construction of Facilities

The Facilities Study shall specify and estimate the cost of the equipment, engineering, procurement and construction work (including overheads), needed to implement the conclusions of the System Impact Study(-ies). Design for any required Interconnection Facilities and/or Upgrades shall be performed under the Facilities Study Agreement unless the Facilities Study Agreement was deemed unnecessary by the Area EPS Operator. However, in the event that the Interconnection Customer did not provide the Area EPS Operator all required Conditional Use Permits at the time of entering into the Facilities Study Agreement, any such Design and/or Upgrades by the Area EPS Operator may be delayed until after the Interconnection Customer has provided to the Area EPS Operator all required Conditional Use Permits or provides a final design. The information in the Conditional Use Permits, or changes to the design, may result in significant modifications to the planned design and/or Upgrades. The Interconnection Customer may send to the Area EPS Operator a redacted version of the Conditional Use Permit(s) to ensure confidentiality, but any and all information that the Area EPS Operator would reasonably need to perform an accurate Facilities Study shall not be redacted. If necessary to comply with these requirements, a confidential version of the

Conditional Use Permit(s) may be provided to the Area EPS Operator, with the confidential information being clearly marked and subjected to Confidentiality provisions in the Overview Process document Section 12.1.

The Area EPS Operator may contract with consultants to perform activities required under the Facilities Study Agreement. The Interconnection Customer and the Area EPS Operator may agree to allow the Interconnection Customer to separately arrange for the design of some of the Interconnection Facilities. In such cases, facilities design will be reviewed and/or modified prior to acceptance by the Area EPS Operator, under the provisions of the Facilities Study Agreement. The Area EPS Operator shall make sufficient information available to the Interconnection Customer, in accordance with confidentiality and critical infrastructure requirements, to permit the Interconnection Customer to obtain an independent design and cost estimate for any necessary facilities.

6.5. Facilities Study Report Timeline

In cases where Upgrades are required, the Facilities Study must be completed within forty-five (45) Business Days of the receipt of the executed Facilities Study Agreement and deposit. In cases where no Upgrades are necessary, and the required facilities are limited to Interconnection Facilities, the Facilities Study must be completed within thirty (30) Business Days of the receipt of the executed Facilities Study Agreement and deposit.

Once the Facilities Study is completed, a draft Facilities Study Report shall be prepared and transmitted to the Interconnection Customer. Upon request, the Area EPS Operator shall provide the Interconnection Customer supporting documentation developed in the preparation of the Interconnection Facilities Study, subject to confidentiality arrangements consistent with these procedures and the Facilities Study Agreement.

Within ten (10) Business Days of providing a draft Facilities Study Report to the Interconnection Customer, the Area EPS Operator and Interconnection Customer shall meet to discuss the results of the Facilities Study. This meeting may be omitted by mutual agreement. The Interconnection Customer may, within twenty (20) Business Days after receipt of the draft report, provide written comments to the Area EPS Operator, which the Area EPS Operator shall address in the final report.

The Area EPS Operator shall issue the final Facilities Study Report within fifteen (15) Business Days of receiving the Interconnection Customer's comments, or promptly upon receiving the Interconnection Customer's statement that they will not provide comments. The Area EPS Operator may reasonably extend the time frame, upon notice

to the Interconnection Customer, if the Interconnection Customer's comments require additional analyses or lead to significant modifications by the Area EPS Operator prior to issuance of the final Facilities Study Report.

7 Interconnection Agreement

7.1. Uniform Contract

For a proposed interconnection that meets the conditions of being classified as a qualifying facility less than 40 kW, the Area EPS Operator shall provide the Interconnection Customer with an executable copy of the Area EPS Operator's Uniform Contract for Cogeneration and Small Power Production Facilities (Uniform Contract), within five (5) Business Days after the completion of the applicable study(-ies).

7.2. Municipal Minnesota Interconnection Agreement

For proposed interconnections that do not meet the conditions of being classified as a qualifying facility less than 40 kW or if requested by the Interconnection Customer in lieu of signing the Uniform Contract, the Area EPS Operator shall provide the Interconnection Customer an executable Municipal Minnesota Interconnection Agreement (MMIA) within five (5) Business Days after the completion of the applicable study(-ies).

7.3. Completion of Agreement

The Interconnection Customer must return a signed Interconnection Agreement at least thirty (30) Business Days prior to the requested in-service date of the propose DER. The Area EPS Operator shall sign and return a copy of the fully executed Interconnection Agreement, back to the Interconnection Customer.

The Interconnection Customer may update the requested in-service date submitted on the Interconnection Application to a date thirty (30) Business Days or later from the date on which the Interconnection Customer submits a signed Interconnection Agreement and payment if required unless the Area EPS Operator agrees to an earlier date.

Upon receipt of the signed Interconnection Agreement, the Area EPS Operator may schedule appropriate metering replacements and construction of facilities, if necessary.

8 Insurance

8.1. Insurance Requirements

At minimum, the Interconnection Customer shall maintain, for the duration the DER system is interconnected to the Area EPS Operator's Distribution System, general liability insurance from a qualified insurance agency with a B+ or better rating by "Best," with a combined single limit of not less than those described in Table 8.1. Such general liability insurance shall include coverage against claims for damages resulting from (i) bodily injury, including wrongful death; and (ii) property damage arising out of the Interconnection Customer's ownership and/or operation of the DER under this agreement. Evidence of the insurance shall state that coverage provided is primary and is not excess to or contributing with any insurance or self-insurance by the Area EPS Operator.

Table 8.1 Liability Insurance Requirements

DER System Size	Liability Insurance Requirement
< 40 kW AC	$300,000
≥ 40 kW AC and < 250 kW AC	$1,000,000
≥ 250 kW AC and < 5 MW AC	$2,000,000
≥ 5 MW AC	$3,000,000

For all proposed DER systems, except those that are qualifying systems less than 40 kW AC, the general liability insurance shall, by endorsement to the policy or polices:

- Include the Area EPS Operator as additionally insured.
- Contain severability of interest clause or cross-liability clause.
- Provide that the Area EPS Operator shall not by reason incur liability to the insurance carrier for the payment of premiums for such insurance if the Area EPS Operator is included as an additionally insured.

8.2. Self-Insurance

The Interconnection Customer may choose to be self-insured provided there is an established record of self-insurance. The Interconnection Customer shall supply the Area EPS Operator at least twenty (20) Business Days prior to the date of initial operation, evidence of an acceptable plan to self-insure to a level of coverage equivalent to that required in Section 8.1. Failure of the Interconnection Customer or the Area EPS Operator to enforce the minimum levels of insurance does not relieve the Interconnection Customer from maintaining such levels of insurance or relieve the Interconnection Customer of any liability.

8.3. Proof of Insurance

The Interconnection Customer shall furnish the required insurance certificates and endorsements to the Area EPS Operator prior to the initial operation of the DER. A copy of the Declaration page of the homeowner's insurance policy is a common example of an insurance certificate. Thereafter, the Area EPS Operator shall have the right to periodically inspect or obtain a copy of the original policy or polices of insurance. Additionally, the Area EPS Operator may request to be additionally listed as an interested third party on the insurance certificates and endorsements for qualifying facilities less than 40 kW AC, to meet the right to periodically obtain a copy of the policy or policies of insurance.

9 Timeline Extensions

9.1. Reasonable Efforts

The Area EPS Operator shall make Reasonable Efforts to meet all the time frames provided in these procedures. If the Area EPS Operator cannot meet a deadline provided herein, it must notify the Interconnection Customer in writing within three (3) Business Days after the deadline, explaining the reason for the failure to meet the deadline and providing an estimated time by which it will complete the applicable interconnection procedure in the process.

9.2. Extensions

For applicable time frames described in these procedures, the Interconnection Customer may request in writing one extension equivalent to half of the time originally allotted (e.g., ten (10) Business Days for a twenty (20) Business Days original time frame), which the Area EPS Operator may not unreasonably refuse. No further extensions for the applicable time frame shall be granted, absent a Force Majeure Event or other similarly extraordinary circumstance.

10 Modifications to Application

10.1. Procedures

At any time after the Interconnection Application is deemed complete, the Interconnection Customer or the Area EPS Operator may identify modifications to the proposed DER system that may improve costs and benefits. This includes reliability of the proposed DER system and the ability for the Area EPS Operator to accommodate the proposed DER system. The Interconnection Customer shall submit to the Area EPS Operator, in writing, all proposed modifications to any information provided in the Interconnection Application. The Area EPS Operator cannot unilaterally modify the Interconnection Application.

10.2. Timelines

Within ten (10) Business Days of receipt of the proposed modification, the Area EPS Operator shall evaluate whether the proposed modification to the Interconnection Application constitutes a Material Modification. The definition in the Section 13 Glossary of the Process Overview document includes examples of what does and does not constitute a Material Modification.

The Area EPS Operator shall notify the Interconnection Customer in writing of the final determination of the proposed modification. For proposed modifications that are determined to be a Material Modification the Interconnection Customer may choose to either: 1) withdraw the proposed modification; or 2) proceed with a new Interconnection Application. The Interconnection Customer shall provide its choice in writing to the Area EPS Operator within ten (10) Business Days after being provided the Material Modification determination. If the Interconnection Customer does not provide its choice within the timeline, the Interconnection Application shall be considered withdrawn.

If the proposed modification is not determined to be a Material Modification, then the Area EPS Operator shall notify the Interconnection Customer in writing that the modification has been accepted and the Interconnection Customer shall retain its eligibility for interconnection, including its position in the queue.

11 Interconnection

11.1. Interconnection Milestones

For DER systems that are not a qualifying facility less than 40 kW AC, the Interconnection Customer and the Area EPS Operator shall agree on milestones for which each Party is responsible and list them in Attachment IV in the Interconnection Agreement. To the greatest extent possible, the Parties will identify all design, procurement, installation and construction requirements associated with the project while also clearly identifying associated timelines, at the beginning, or as early within the process as possible, of the design, procurement, installation and construction phase.

A Party's obligation under this provision may be extended by agreement. If a Party anticipates that they will be unable to meet a milestone for any reason other than a Force Majeure Event, they shall immediately notify the other Party of the reason(s) for not meeting the milestone, then propose the earliest reasonable alternative date in which this and future milestones will be met and request appropriate amendments to the Interconnection Agreement and its attachments. The Party affected by the failure to meet a milestone shall not unreasonably withhold agreement to such an amendment unless:

- The Party will suffer significant uncompensated economic or operational harm from the delay, or

- Attainment of the same milestone has previously been delayed, or

- The Party has reason to believe the delay in meeting the milestone is intentional or unwarranted notwithstanding the circumstance explained by the Party proposing the amendment.

If the Party affected by the failure to meet a milestone disputes the proposed extension, the affected Party may pursue dispute resolution as described in the Overview Process document.

11.2. Metering

Any metering requirements necessitated by the use of the DER system shall be installed at the Interconnection Customer's expense. The metering-related costs will be included in the final invoice of interconnection costs to the Interconnection Customer. The Interconnection Customer is also responsible for metering replacement costs not covered in the Interconnection Customer's general customer charge. The Area EPS Operator may charge Interconnection Customers an ongoing metering-related charge for an estimate of ongoing metering-related costs specifically demonstrated.

11.3. Inspection, Testing and Commissioning

Upon completing construction of the DER system, the Interconnection Customer will cause the DER system to be inspected or otherwise certified by the appropriate local electrical wiring inspector with jurisdiction. The Interconnection Customer shall then arrange for the inspection and testing of the DER system and the Customer's Interconnection Facilities prior to interconnection pursuant to Minnesota Technical Requirements. Commissioning tests of the Interconnection Customer's installed equipment shall be performed pursuant to applicable codes and standards of Minnesota's Technical Requirements and Section 15 in the Overview Process.

The Interconnection Customer shall notify the Area EPS Operator of testing and inspection no fewer than five (5) Business Days in advance, or as may be agreed to by the Parties. The Interconnection Customer shall provide to the Area EPS Operator a testing procedure that will be followed on the day of testing and inspection no fewer than ten (10) Business Days prior to the testing and inspection date. The testing procedure should include tests and/or inspections to confirm the DER system will meet the technical requirements of interconnection. The Area EPS Operator shall review the testing procedure for completeness and notify the Interconnection Customer if the

testing procedure fails to address components of the technical requirements for interconnection.

The Area EPS Operator shall send qualified personnel to the DER site to inspect the interconnection and witness the testing. Testing and inspection shall occur on a Business Day at a mutually agreed upon date and time. The Area EPS Operator may waive the right to witness the testing.

11.4. Interconnection Costs

11.4.1 Estimation of Interconnection Costs

The Interconnection Customer shall pay for the actual cost of the Interconnection Facilities and Distribution Upgrades along with the Area EPS Operator's cost to commission the proposed DER system. An estimate of the interconnection costs shall be stated in the Uniform Contract or in the MMIA in Attachment II, Interconnection Facilities and Upgrades, as a detailed itemization of such costs. If Network Upgrades are required, the actual cost of the Network Upgrades, including overheads, shall be borne by the Interconnection Customer pursuant to the Transmission Provider and associated agreements.

11.4.2 Progressive Payment of Interconnection Costs

The Area EPS Operator shall invoice the Interconnection Customer for the design, engineering, construction and procurement costs of the Interconnection Facilities and Upgrades described in the MMIA Attachment II, on a monthly basis, or other manner agreed upon by both Parties in the MMIA, or as described in the Uniform Contract. The Interconnection Customer shall pay each invoice within twenty-one (21) Business Days or as agreed to in the MMIA or Uniform Contract.

11.4.3 Final Accounting of Interconnection Facilities and Upgrade Costs

If distribution or transmission facilities required upgrades to accommodate the proposed DER system, the Area EPS Operator shall render the final interconnection cost invoice to the Interconnection Customer within eighty (80) Business Days (approximately four calendar months) of completing the construction and installation of the Area EPS Operator's Interconnection Facility and Upgrades. The Area EPS Operator shall provide the Interconnection Customer with a final accounting report identifying the difference between the actual Interconnection Customer's cost responsibility and the Interconnection Customer's previous aggregate payments to the Area EPS Operator for the specific DER system interconnection. Upon the final accounting submitted to the Interconnection Customer, the balance between the actual cost and previously

aggregated payments shall be paid to the Area EPS Operator within twenty (20) Business Days. If the balance between the actual cost and previously aggregated payments is a credit, the Area EPS Operator shall refund the Interconnection Customer within twenty (20) Business Days.

11.4.4 Final Interconnection Costs without Facilities and Upgrades Needed

Within thirty (30) Business Days the final invoice for the interconnection costs shall be rendered to the Interconnection Customer once the proposed DER system has been commissioned by the Area EPS Operator, or upon the commissioning being waived by the Area EPS Operator. The Interconnection Customer shall make payment to the Area EPS Operator within twenty-one (21) Business Days of receipt, or as otherwise stated in the Uniform Contract or MMIA.

11.5. Security of Payment

At the option of the Area EPS Operator, either the "Traditional Security" or the "Modified Security" method shall be used for assurance of payment of interconnection cost.

Under the Traditional Security method, the Interconnection Customer shall provide reasonable, adequate assurances of credit, including a letter of credit or personal guaranty of payment and performance from a creditworthy entity acceptable under the Area EPS Operator credit policy. The letter of credit shall also include procedures for the unpaid balance of the estimated amount shown in the Interconnection Agreement for the totality of all anticipated work or expense incurred by the Area EPS Operator associated with the Interconnection Application. The payment for these estimated costs shall be as follows:

- One-third of estimated costs, shall be due no later than when the Interconnection Customer signs the Interconnection Agreement.
- An additional one-third of estimated costs, shall be due prior to initial energization of the DER with the Area EPS Operator.
- After the project completion, the remainder of actual costs, incurred by Area EPS Operator, shall be due within thirty (30) Business Days from the date the invoice is mailed.

Under the Modified Security method, at least twenty (20) Business Days prior to the commencement of the design, procurement, installation, or construction of a discrete

portion of the Area EPS Operator's Interconnection Facilities and Upgrades, the Interconnection Customer shall provide the Area EPS Operator, at the Interconnection Customer's option, a guaranty, letter of credit or other form of security that is reasonably acceptable to the Area EPS Operator and is consistent with the Minnesota Uniform Commercial Code. Such security for payment shall be in an amount sufficient to cover the costs for constructing, designing, procuring, and installing the applicable portion of the Area EPS Operator's Interconnection Facilities and Upgrades and shall be reduced on a dollar-for-dollar basis for payments made to the Area EPS Operator under the Interconnection Agreement during its term.

The guaranty must be made by an entity that meets the creditworthiness requirements of the Area EPS Operator and contain terms and conditions that guarantee payment of any amount that may be due from the Interconnection Customer, up to an agreed-to maximum amount.

The letter of credit must be issued by a financial institution or insurer reasonably acceptable to the Area EPS Operator and must specify a reasonable expiration date not sooner than sixty (60) Business Days, (three calendar months), after the due date of the final accounting report and invoice described in Section 11.4.

11.6. Non-Warranty

Area EPS Operator does not give any warranty, expressed or implied, as to the adequacy, safety, or other characteristics of any structures, equipment, wires, appliances or devices owned, operated, installed or maintained by the Interconnection Customer, including without limitation the DER and any structures, equipment, wires, appliances or devices not owned, operated or maintained by the Area EPS Operator. The Area EPS Operator does not guarantee uninterrupted power supply to the DER and will operate the Distribution System with the same reliability standards for the entire customer base.

11.7. Authorization for Parallel Operation

The Interconnection Customer shall not operate its DER system in parallel with the Area EPS Operator's Distribution System without prior written authorization from the Area EPS Operator. The Area EPS Operator shall provide such authorization within three (3) Business Days from when the Area EPS Operator receives notification that the Interconnection Customer has complied with all applicable parallel operations requirements and commissioning has been successfully completed. Such authorization shall not be unreasonably withheld, conditioned or delayed.

11.8. Continual Compliance

The Interconnection Customer shall operate its DER system in compliance with the Area EPS Operator's technical requirements referred to in the executed Interconnection Agreement. The Area EPS Operator may periodically inspect, at its own expense, the operation of DER system as it relates to power quality, thermal limits and reliability. Failure by the Interconnection Customer to remain in compliance with the technical requirements will result in the disconnection of the DER system from the Area EPS Operator's Distribution System.

11.9. Disconnection of DER

The Area EPS Operator has the right to disconnect the DER in the event of the following:

- Does not continue to follow and maintain IEEE 1547 settings approved by the Area EPS Operator as indicated by the adopted technical requirements.
- Does not meet all the requirements of the Study Process.
- Refuses to sign either the Interconnection Agreement or the Area EPS Operator's Uniform Contract.

The Area EPS Operator may temporarily disconnect the DER upon the following conditions:

- For scheduled outages upon reasonable notice.
- For unscheduled outages or emergency conditions.
- If the DER does not operate in the manner consistent with the Study Process.

The Area EPS Operator shall inform the Interconnection Customer in advance of any scheduled disconnections, or as reasonable, after an unscheduled disconnection.

Pre-Application Report Request

Persons interested in finding out the additional information regarding the interconnection of a distributed energy resource to the Utility's distribution system are to fill out this Pre-Application Report Request. The pre-application report request is to be filled out as completely as possible by the applicant. The Utility will provide the applicant with a Pre-Application Report within 15 business days once the completed Pre-Application Report Request and a $300 fee is submitted to the Utility.

Distributed Energy Resource Information		
Project Address:		
City:	State:	Zip Code:
GPS Coordinates:	Nearby Cross Streets:	
Location of the Proposed Point of Common Coupling (e.g. meter number or pole number):		
DER Type *(Check all that apply)*: ☐ Solar Photovoltaic ☐ Wind ☐ Battery Storage ☐ Combined Heat and Power ☐ Solar Thermal ☐ Other (please specify)		
Total Aggregate Nameplate Rating of Proposed DER System *(kW AC)*:		
Phase Configuration of Proposed DER System	☐ Single ☐ Three	
Service Voltage of Proposed DER System	Volts	
Will this be a stand-alone generator not interconnected to onsite load (not including station service)?	☐ Yes ☐ No	

Please attach copy of site map for proposed project and any additional information that may be helpful in fulfilling the pre-application request. Site map should include true north, proposed project location including general layout, proposed service point location and major roadways.

For Office Use Only		
Date Received:	Application Fee Received:	☐ Yes ☐ No
Date Completed Pre-Application Report Sent to Applicant:		

Point of Interconnection – Additional Information

Is the proposed interconnection to an existing service? (If no, applicant is to skip to the next section.)	☐ Yes ☐ No
Customer Name:	Customer Account Number:
Existing loads at site *(kW AC)*:	
List future additional loads planned for at site *(in kW AC)*:	

Project Contact Information

Full Name:		
Name of Business:		
Street Address:		
City:	State:	Zip Code:
Email:	Phone:	

Payment and Agreement

There is a non-refundable $300 fee for the construction of a pre-application report. By signing this document, I acknowledge and understand that:

- Neither review of this application nor construction of any report shall begin until the full amount of the fee has been paid to Hawley Public Utilities.
- The Utility shall provide a report with only the available information on the proposed point of interconnection.
- The information provided by the Utility may become outdated and not useful at the time of submission of a complete Interconnection Application.
- The confidentiality provision as listed in Section 12.1 of the Overview Process of the Municipal Minnesota Distributed Energy Resource Interconnection Process apply.
- Upon receipt of the report no guarantee is made by the Utility that a future Interconnection Application will be approved for this proposed site.

Applicant Signature: _____ Date: _____

*****Please print clearly or type and return completed along with any additional documentation*****

Pre-Application Report

This report summarizes information available to the Utility regarding an interconnection of a distributed energy resource to the Utility's distribution system. The report includes only information that is readily available to the Utility. This report is not a guarantee by the Utility that a future interconnection application will be approved for the proposed site. Information provided in this report is subjected to change as modifications are made to the Utility's distribution system.

Pre-Application Request					
Pre-Application ID:					
Project Address:					
DER Size:		kW AC	DER Type:		
Project Contact:					
Email:				Phone:	

Electric Distribution System Information			Info Not Available
Total capacity of the circuit based on normal conditions likely to serve the proposed PCC		MW AC	
Existing aggregate generation capacity interconnected to the circuit likely to serve the proposed PCC		MW AC	
Aggregate queued generation capacity for the circuit likely to serve the proposed PCC		MW AC	
Available capacity of the circuit most likely to serve the proposed PCC		MW AC	
Estimated peak load of relevant line sections		kW AC	
Estimated minimum load of relevant line sections (daytime minimum load to be specified for solar DER if available.)		kW AC	
Substation Voltage (Nominal Distribution)		kV	
Substation Voltage (Nominal Transmission)		kV	
Nominal distribution circuit voltage at proposed PCC		kV	

PCC: Point of Common Coupling

Electric Distribution System Information - Continued			
			Info Not Available
Approximate circuit distance between the proposed PCC and the substation:		Miles	
Distance to three phase circuit (if not already located on a three-phase circuit):		Miles	
Limiting conductor ratings from the proposed PCC to the substation		Amps	
Number of available phases on the area EPS at the proposed PCC		Phases	
Is the proposed point of common coupling located on a spot network, grid network, or radial supply?	☐ Yes	☐ No	
Is the proposed PCC located behind a line voltage regulator?	☐ Yes	☐ No	
Type of voltage regulating devices between substation and proposed PCC	Device A		
	Device B		
	Device C		
Number and type of protection devices between substation and proposed PCC	Device A		
	Device B		
	Device C		
Any additionally known distribution system constraints?	☐ Yes	☐ No	

Additional known constraints that could affect installation or operation of the DER or Area EPS at the proposed PPC are attached to this report. Constraints may include, but are not limited to, electrical dependencies at that location, short circuit interrupting capacity issues, power quality or stability issues on the circuit, capacity constraints, or secondary networks.

Utility Information			
Report Completed By:			
Company:			
Project Contact:			
Email:		Phone:	

Simplified Interconnection Application

Persons interested in applying for the interconnection of a distributed energy resource (DER) to the Utility's distribution system through the Simplified Process are to fill out this Simplified Interconnection Application. The Simplified Interconnection Application is to be used for inverter-based DER technologies with the capacity of 20 kW AC or less and is to be filled out completely by the Applicant. The Simplified Application shall be returned to the Utility with the requested material information and a non-refundable $100 application fee.

Proposed DER interconnections to the Utility's distribution submitted under the Simplified Process may be moved into the Fast Track Process if engineering screens are failed during the Simplified Interconnection Application review. Timeline for review of the Simplified Application is as follows:

- Upon receipt of a Simplified Interconnection Application the Utility has 10 business days to review the application for completeness.
- If the application is deemed incomplete, the Utility shall notify the Applicant of what additional information material is required.
- The Applicant has 5 business days to return the missing information material or their application may lose its queue position and be deemed withdrawn.
- The Utility shall have a total of 20 business days to review the Simplified Interconnection Application, not including time waiting for additional information material to deem the application completed.
- The Utility will notify the Application if the proposed DER system is preliminary approved for interconnection or if the proposed DER system will need to be moved in the Fast Track Process.

Checklist for Submission to Utility	
The items below shall be included with submittal of the Simplified Application to the Utility. Failure to include all items will deem the Simplified Application incomplete.	
	Included
$100 Non-Refundable Simplified Application Fee	☐ Yes
One-line diagram – Details required on one-line diagram specified at the end of the interconnection application.	☐ Yes
All Certified Equipment Manufacturer Specification Sheets	☐ Yes
Site Layout Drawing	☐ Yes
Copy of Insurance Declaration page or other acceptable proof of insurance	☐ Yes

Possible Additional Documentation

- If an Application Agent is being used for this project, the Site Layout Drawing must be signed by the Interconnection Customer indicating Site Control of the DER interconnection location.
- If the DER export capacity is limited, include information material explaining the limiting capabilities.
- If Energy Storage is included with the proposed DER system include the Energy Storage Application.

Simplified Interconnection Application

Interconnection Customer		
Full Name (must match the name of the existing service account):		
Account Number:	Meter Number:	
Mailing Address:		
City:	State:	Zip Code:
Email:	Phone:	

Application Agent	
Is the Customer using an Application Agent for this application?	☐ Yes ☐ No
If Interconnection Customer is not using an Application Agent, please skip to the next section.	
Application Agent:	
Company Name:	
Email:	Phone:

For Office Use Only	
Application ID:	Queue Number:
Date Received:	Application Fee Received: ☐ Yes ☐ No
Date Preliminary Approval Provided to Applicant:	

Hawley Public Utilities
305 6th St PO Box 69, Hawley MN 56549 (218)483-3331

Distributed Energy Resource Information

Location (if different from mailing address of Interconnection Customer):	
Will the Proposed DER system be interconnected to an existing electric service?	☐ Yes ☐ No
Is the Distributed Energy Resource a single generating unit or multiple?	☐ Single ☐ Multiple

DER Type *(Check all that apply)*:

☐ Solar Photovoltaic ☐ Wind ☐ Energy Storage

☐ Combined Heat and Power ☐ Solar Thermal ☐ Other (please specify)

DER systems with Energy Storage must also submit the Energy Storage Application to the Utility.

Inverter Manufacturer:	Model:
Phase Configuration of Proposed DER System:	☐ Single ☐ Three
Aggregate Inverter(s) Nameplate Rating:	kW_{ac} kVA_{ac}
Is the export capability of the DER limited?	☐ Yes ☐ No

If the DER export capacity is limited, include information material explaining the limiting capabilities.

Aggregate DER Capacity (the sum of nameplate capacity of all generation and storage devices at the PCC):	kW_{ac}
Installed DER System Cost (before incentives):	$
Estimated Installation Date:	

Equipment Certification

Is the DER equipment certified[1]?	☐ Yes ☐ No

Please list all certified IEEE 1547 equipment below. Include all certified equipment manufacturer specification sheets with the Simplified Application submission.

	Equipment Type	Certifying Entity
1		
2		
3		

[1] Information regarding certified equipment can be found in Section 14 and Section 15 of the Overview Process document.

Interconnection Agreement

Proposed DER interconnections that are also deemed Qualifying Facilities under Minnesota Statutes §216B.164 are eligible to sign the Utility's Uniform Contract for Cogeneration and Small Power Production Facilities. Included in this agreement are payment terms for excess power generated by the proposed DER system the Utility may purchase. In lieu of the Utility's Uniform Contract for Cogeneration and Small Power Production Facilities, the Interconnection Customer may choose to instead sign the Municipal Minnesota Interconnection Agreement (MMIA).

The Interconnection Customer requests an MMIA to be executed in lieu of the Utility's Uniform Contract for Cogeneration and Small Power Production Facilities.	☐ Yes ☐ No

Disclaimers – Must be completed by Interconnection Customer

	Initials
The Interconnection Customer has opportunities to request a timeline extension during the interconnection process. Failure by the Interconnection Customer to meet or request an extension for a timeline outlined in the Interconnection Process could result in a withdrawn queue position and the need to re-apply.	
Propose DER interconnection to the Utility's distribution submitted under the Simplified Process may be moved into the Fast Track Process if engineering screens are failed during the Simplified Application review.	

Application Signature – Must be completed by Interconnection Customer

I designate the individual or company listed as my Application Agent to serve as my agent for the purpose of coordinating with the Area EPS Operators on my behalf throughout the interconnection process.

_____
Initials

I hereby certify that, to the best of my knowledge, the information provided in this Application is true, and that I have appropriate Site Control in conformance with the Interconnection Process. I agree to abide by the Municipal Minnesota Distributed Energy Resource Interconnection Process (M-MIP) and return the Certificate of Completion when the DER has been installed.

_____ _____
Applicant Signature: Date:

*****Please print clearly or type and return completed along with any additional documentation*****

Information Required on One-Line Diagram

An Interconnection Application must include a site electrical one-line diagram showing the configuration of all Distributed Energy Resource equipment, current and potential circuits, and protection and control schemes. The one-line diagram shall include:

- Applicant name.
- Application ID.
- Installer name and contact information.
- Address where DER system will be installed - must match application address.
    - Be sure to list the address for the protective interface equipment if the protective interface equipment is located at a different address than the DER system.
- Correct positions of all equipment, including but not limited to panels, inverter, and DC/AC disconnect. Include distances between equipment, and any labeling found on equipment.

Interconnection Application

Persons interested in applying for the interconnection of a distributed energy resource to the Utility's distribution system through the Fast Track or Study Processes are to fill out this Interconnection Application. The Interconnection Application is to be filled out completely by the applicant or as noted in each section of the application. The Utility will contact the applicant within 10 business days once the Interconnection Application and the corresponding processing fee is submitted to the Utility. The Utility will then notify the applicant of the completeness of their application. If the application is deemed incomplete by the Utility, the Utility will provide the applicant with a list of missing material. The applicant will then have 10 business days to provide the Utility with this information or request an extension, otherwise the application will be deemed incomplete and the applicant will lose their place in the queue. Section that are noted with * are required to be filled out.

Checklist for Submission to Utility	
The items below shall be included with submittal of the Interconnection Application to the Utility. Failure to include all items will deem the Interconnection Application incomplete.	
	Included
Non-Refundable Processing Fee Fast Track • $100 + $1/kW for Certified Systems • $100 + $2/kW for Non-Certified Systems Study Process • $1,000 + $2/kW down payment. Additional study fees may apply.	☐ Yes
One-line diagram • This one-line diagram must be signed and stamped by a Professional Engineer licensed in Minnesota if the DER is uncertified greater than 20 kW AC or if certified system is over 250 kW. • Details required on one-line diagram specified at the end of the interconnection application.	☐ Yes
Schematic drawings for all protection and control circuits, relay current circuits, relay potential circuits, and alarm/monitoring circuits	☐ Yes
Inverter Specification Sheet(s) (if applicable)	☐ Yes
Documentation that describes and details the operation of protection and control schemes	☐ Yes
Documentation showing site control	☐ Yes
Aerial map showing DER system layout including major roadways and true north	☐ Yes
Possible Additional Documentation • If the DER export capacity is limited, include information material explaining the limiting capabilities. • If Energy Storage is included with the proposed DER system include the Energy Storage Application.	

General *		
Select Review Process:	☐ Fast Track Process	☐ Study Process
Application is for:	☐ New Distribution Energy Resource	☐ Capacity Addition or Material Modification to Existing Distributed Energy Resource
If Capacity Addition or Material Modification to existing facility, please describe:		
Distributed Energy Resource will be used for what reason? (Check all that apply): ☐ Net Metering ☐ Supply Power to Interconnection Customer ☐ Supply Power to Area EPS		
Installed DER System Cost (before incentives):	$	

Interconnection Customer *		
Full Name (must match the name of the existing service account):		
Account Number:	Meter Number:	
Mailing Address:		
City:	State:	Zip Code:
Email:	Phone:	

** Indicates section must be completed.*

Application Agent *	
Is the Customer using an Application Agent for this application?	☐ Yes ☐ No
If Interconnection Customer is not using an Application Agent, please skip to the next section.	
Application Agent:	
Company Name:	
Email:	Phone:

Distributed Energy Resource Information *			
Estimated Installation Date:			
Location (if different from mailing address of Interconnection Customer):			
Will the Proposed DER system be interconnected to an existing electric service?		☐ Yes	☐ No
Is the Distributed Energy Resource a single generating unit or multiple?		☐ Single	☐ Multiple
DER Type *(Check all that apply)*:			
☐ Solar Photovoltaic	☐ Wind	☐ Energy Storage	
☐ Combined Heat and Power	☐ Solar Thermal	☐ Other (please specify)	
DER systems with Energy Storage must also submit the Energy Storage Application to the Utility.			
Total Number of Distributed Energy Resources to be interconnected pursuant to this Interconnection Application:			
Phase configuration of Distributed Energy Resource(s):		☐ Single Phase	☐ Three Phase
Type of Generator:	☐ Inverter	☐ Synchronous	☐ Induction
Aggregate DER Capacity (the sum of nameplate capacity of all generation and storage devices at the PCC):			
kW_{ac}		kVA_{ac}	

** Indicates section must be completed.*

Export Capacity Limitation *	
Is the export capability of the DER limited?	☐ Yes ☐ No
If the DER export capacity is limited, complete the following sections and include information material explaining the limiting capabilities.	
Maximum Physical Export Capacity Requested:	kW_{ac}
If Yes, please provide additional details describing method of export limitation:	

Load Information *	
Interconnection Customer's or Customer-sited Load:	kW_{ac}
Typical Reactive Load (if known):	

Equipment Certification *		
Is the DER equipment certified?		☐ Yes ☐ No
Please list all IEEE 1547 certified equipment below. Include all certified equipment manufacturer specification sheets with the Interconnection Application submission.		
	Equipment Type	Certifying Entity
1		
2		
3		
4		

** Indicates section must be completed.*

Prime Mover *		
Please indicate the prime mover:		
☐ Solar Photovoltaic	☐ Microturbine	☐ Fuel Cell
☐ Reciprocating Engine	☐ Gas Turbine	☐ Other (please specify)

Is the prime mover compatible with certified protection equipment package?	☐ Yes ☐ No

DER Manufacturer:	Model Name & Number:	Version:

List of Adjustable Set Points for Protection Equipment or Software:

Summer Name Plate Rating: kW_{ac}	Summer Name Plate Rating: kW_{ac}
Winter Name Plate Rating: kVA_{ac}	Winter Name Plate Rating: kVA_{ac}

Rated Power Factor:	Leading:	Lagging:

A completed Power System Load Flow data sheet must be supplied with the Interconnection Application.

Only appropriate sections beyond this point until the signature page are to be completed.

Distributed Energy Resource Characteristic Data (for Inverter-based machines)	
Max design fault contribution current:	
Is your response to the previous field an Instantaneous or RMS measurement?	☐ Instantaneous ☐ RMS
Harmonic Characteristics:	
Start-up Requirements:	

** Indicates section must be completed.*

Distributed Energy Resource Characteristic Data (for Synchronous machines)	
RPM Frequency:	Neutral Grounding Resistor:
Direct Axis Synchronous Reactance, X_d:	Zero Sequence Reactance, X_0:
Direct Axis Transient Reactance, X'_d:	KVA Base:
Direct Axis Subtransient Reactance, X''_d:	Field Volts:
Negative Sequence Reactance, X_2:	Field Amperes:
Please provide the appropriate IEEE model block diagram of excitation system, governing system and power system stabilizer (PSS) in accordance with the regional reliability council criteria. A PSS may be determined to be required by applicable studies. A copy of the manufacturer's block diagram may not be submitted.	

Distributed Energy Resource Characteristic Data (for Induction machines)	
RPM Frequency:	Neutral Grounding Resistor:
Motoring Power (kW):	Exciting Current:
Heating Time Constant:	Temperature Rise:
Rotor Resistance, R_r:	Frame Size:
Stator Resistance, R_s:	Design Letter:
Stator Reactance, X_s:	Reactive Power Required In Vars (No Load):
Rotor Reactance, X_r:	Reactive Power Required In Vars (Full Load):
Magnetizing Reactance, X_m:	Total Rotating Inertia, H:
Short Circuit Reactance, X''_d:	

Interconnection Facilities Information	
Will a transformer be used between the DER and the Point of Common Coupling?	☐ Yes ☐ No
Will the transformer be provided by the Interconnection Customer? If yes, please fill in the fields below.	☐ Yes ☐ No
Proposed location of protective interface equipment on property:	

Transformer Data (For Interconnection Customer-Owned Transformer)			
What is the phase configuration of the transformer?		☐ Single Phase ☐ Three Phase	
Size (kVA):	Transformer Impedance (%):	On kVA Base:	
Transformer Volts: (Primary)	Delta:	Wye:	Wye Grounded:
Transformer Volts: (Secondary)	Delta:	Wye:	Wye Grounded:
Transformer Volts: (Tertiary)	Delta:	Wye:	Wye Grounded:

Transformer Fuse Data (For Interconnection Customer-Owned Fuse)			
Manufacturer:	Type:	Size:	Speed:

Interconnecting Circuit Breaker (For Interconnection Customer-Owned Circuit Breaker)		
Manufacturer:	Type:	
Load Rating (in Amps):	Interrupting Rating (In Amps):	Trip Speed (Cycles):

Interconnection Protective Relays (For Microprocessor Controlled Relays)		
Setpoint Function	Minimum	Maximum

Interconnection Protective Relays (For Relays with Discrete Components)			
Manufacturer:	Type:	Style/Catalog No.:	Proposed Setting:
Manufacturer:	Type:	Style/Catalog No.:	Proposed Setting:
Manufacturer:	Type:	Style/Catalog No.:	Proposed Setting:
Manufacturer:	Type:	Style/Catalog No.:	Proposed Setting:
Manufacturer:	Type:	Style/Catalog No.:	Proposed Setting:

Current Transformer Data:			
Manufacturer:	Type:	Accuracy Class:	Proposed Ratio Connection:
Manufacturer:	Type:	Accuracy Class:	Proposed Ratio Connection:

Potential Transformer Data:			
Manufacturer:	Type:	Accuracy Class:	Proposed Ratio Connection:
Manufacturer:	Type:	Accuracy Class:	Proposed Ratio Connection:

For Office Use Only	
Application ID:	
Date Received:	Application Fee Received: ☐ Yes ☐ No
Date Completed:	

*Interconnection Agreement **

Proposed DER interconnections that are also deemed Qualifying Facilities less than 40 kW AC under Minnesota Statutes §216B.164 are eligible to sign the Utility's Uniform Contract for Cogeneration and Small Power Production Facilities. Included in this agreement are payment terms for excess power generated by the proposed DER system the Utility may purchase. In lieu of the Utility's Uniform Contract for Cogeneration and Small Power Production Facilities, the Interconnection Customer may choose to instead sign the Municipal Minnesota Interconnection Agreement (MMIA).

The Interconnection Customer requests an MMIA to be executed in lieu of the Utility's Uniform Contract for Cogeneration and Small Power Production Facilities.	☐ Yes ☐ No

*Disclaimers – Must be completed by Interconnection Customer **

	Initials
The Interconnection Customer has opportunities to request a timeline extension during the interconnection process. Failure by the Interconnection Customer to meet or request an extension for a timeline outlined in the Interconnection Process could result in a withdrawn queue position and the need to re-apply.	
Propose DER interconnection to the Utility's distribution submitted under the Fast Track Process may be moved into the Study Process if engineering screens are failed during the Interconnection Application review.	

*Application Signature – Must be completed by Interconnection Customer **

I designate the individual or company listed as my Application Agent to serve as my agent for the purpose of coordinating with the Area EPS Operators on my behalf throughout the interconnection process. _____ Initials

I hereby certify that, to the best of my knowledge, the information provided in this Application is true, and that I have appropriate Site Control in conformance with the Interconnection Process. I agree to abide by the Municipal Minnesota Distributed Energy Resource Interconnection Process (M-MIP) and will inform the Utility if the proposed DER system changes from the details listed in this Interconnection Application.

_____ Applicant Signature:

_____ Date:

*****Please print clearly or type and return completed along with any additional documentation*****

Information Required on One-Line Diagram

An Interconnection Application must include a site electrical one-line diagram showing the configuration of all Distributed Energy Resource equipment, current and potential circuits, and protection and control schemes. The one-line diagram shall include:

- Applicant name.
- Application ID.
- Installer name and contact information.
- Address where DER system will be installed - must match application address.
    - Be sure to list the address for the protective interface equipment if the protective interface equipment is located at a different address than the DER system.
- Correct positions of all equipment, including but not limited to panels, inverter, and DC/AC disconnect. Include distances between equipment, and any labeling found on equipment.

This one-line diagram must be signed and stamped by a Minnesota licensed Professional Engineer if the Distributed Energy Resource is larger than 20 kW (if uncertified) and 250 kW (if certified.)

Storage Application

This form is required in addition to a completed Interconnection Application form for any DER with an energy storage component. An application to interconnect energy storage is only required for storage designed to operate in parallel with the distribution system. Electric vehicles and backup generators do not need to apply.

Energy Storage		
Application for:	☐ Stand-alone storage as DER ☐ Storage as component of DER	
Customer Account Number:		
Address of Generating Facility:		
City:	State:	Zip Code:
Equipment Manufacturer:	Equipment Model:	
Max Continuous Real Power (In kW):	Max Continuous Apparent Power (In kVA):	
Power Factor range of adjustability:	Peak AC Energy (In kWh):	
Is the equipment UL 1741 listed? *Manufacturer specification sheet(s) are required to be attached to this application.*	☐ Yes ☐ No	
Is the storage 100% charged by a net energy metering eligible energy source?	☐ Yes ☐ No	
Source charging the storage *(Check all that apply)*: ☐ Utility ☐ Wind ☐ Solar ☐ Diesel ☐ Other (please specify)		
Is the storage configured to export energy to the Area EPS?	☐ Yes ☐ No	
Are the settings accessible to the end user?	☐ Yes ☐ No	

For Office Use Only	
Application ID:	Queue Number:
Date Received:	

Hawley Public Utilities
305 6th St PO Box 69, Hawley, MN 56549 (218)483-3331

Energy Storage
Available control operating modes:
Control modes being enabled for interconnection:
For non-export, how does the system determine the magnitude of customer load?
What is the process for changing operational modes of the energy storage?

Please attach any additional materials.

Supplemental Review Offer

The Distributed Energy Resource (DER) Interconnection Application in the name of _____*(Interconnection Customer)*_____ for a DER system described as _____*(description of DER System)*_____ and proposed to be located at _____*(Address or Legal Description)*_____ has failed one or more of the initial engineering screens. To continue with the Interconnection Process, the Interconnection Customer may choose to continue with a Supplemental Review or may choose the Interconnection Application to be evaluated under the Study Process track. The Interconnection Customer has fifteen (15) Business Days to indicate to the Area Electrical Power System (EPS) Operator, the next step in the Interconnection Process and return this Supplemental Review Offer or the Interconnection Application will only continue to be evaluated under the Study Process track or be deemed withdrawn.

Interconnection Customer agrees that the Area EPS Operator shall:

_____ Proceed with a Supplemental Review of the Interconnection Application.

_____ Continue evaluation of the Interconnection Application under the Study Process track.

_____ Deem the Interconnection Application withdrawn.

If the Interconnection Customer chooses to proceed with the Supplemental Review, the Interconnection Customer shall note the order in which the Supplemental Review screens should be performed and indicate the action the Area EPS Operator should take if a Supplement Review screen has failed.

Supplemental Review Screen	Order to Perform Screens	Cost Estimate of Review Screen
Minimum Load		
Voltage & Power Quality		
Safety & Reliability		
	Total Deposit Required	

Upon failure of a Supplemental Review screen or upon notification the Area EPS Operator is unable to complete a Supplemental Review screen, the Interconnection Customer agrees that the Area EPS Operator shall:

_____ Proceed with the remaining Supplemental Review screens.

_____ Stop the Supplemental Review screens and continue evaluation of the Interconnection Application under the Study Process track.

_____ Stop the Supplemental Review screens and contact the Interconnection Customer for further instructions.

_____ Deem the Interconnection Application withdrawn.

The Area EPS Operator has indicated a good faith estimate of the cost for each Supplemental Review screen. The full estimate is due as a deposit prior to the start of any Supplemental Review. Upon completion of the Supplemental Review or termination of the Supplemental Review by the Interconnection Customer, the balance of the actual Supplemental Review costs will be billed or credited to the Interconnection Customer. The balance shall be paid in full to the respective party within twenty (20) Business Days of receipt of the final Supplemental Review invoice from the Area EPS Operator.

The Area EPS Operator shall have thirty (30) Business Days to complete the Supplemental Review upon receipt of a signed copy of this Supplemental Review Offer and the deposit required. The Area EPS Operator shall provide the Interconnection Customer with a written report indicating the Supplemental Review results and the underlying analysis performed.

The Interconnection Customer agrees to terms and conditions specified in this Supplemental Review Offer and in the Fast Track Process document. The Interconnection Customer understands the Supplemental Review screens will not start until the deposit is received by the Area EPS Operator.

_____

Interconnection Customer Signature

_____

Date

For Office Use Only	
Application ID:	
Date Offer Received:	Date Deposit Received:
Date Supplement Review Results Provided to Interconnection Customer:	

Minnesota Municipal Power Agency's 5 kW Hometown Solar
Olivia, MN

INTERCONNECTION PROCESS

System Impact Study Agreement

ABSTRACT

Agreement outlining the scope, timeline and responsibility of cost for a proposed DER's system impact to the distribution system

System Impact Study Agreement

THIS AGREEMENT is made and entered into this _____day of_____ 20___ by and between_____, ("Interconnection Customer"), and ___Hawley Public Utilities____, a municipal utility existing under the laws of the State of Minnesota, ("Area EPS Operator"). Interconnection Customer and Area EPS Operator each may be referred to as a "Party," or collectively as the "Parties."

RECITALS

WHEREAS, the Interconnection Customer is proposing to develop a Distributed Energy Resource (DER) or generating capacity addition to an existing DER consistent with the Interconnection Application completed by the Interconnection Customer on_____(date); and

WHEREAS, the Interconnection Customer desires to interconnect the DER with the Area EPS Operator's Electric System; S

WHEREAS, the Interconnection Customer has requested the Area EPS Operator to perform a System Impact Study to assess the impact of interconnecting the DER with the Area EPS Operator's Electric System, and potential Affected System(s);

NOW, THEREFORE, in consideration of, and subject to, the mutual covenants contained herein the Parties agreed as follows:

1. When used in this Agreement, with initial capitalization, the terms specified shall have the meanings indicated, or the meanings specified, in the Municipal Minnesota Distributed Energy Resources Interconnection Process (M-MIP).

2. The Interconnection Customer elects and the Area EPS Operator shall cause to be performed a System Impact Study consistent with the M-MIP. The scope of a System

Impact Study shall be subject to the assumptions set forth in this Agreement; including Attachment A.

3. A System Impact Study will be based upon the technical information provided by Interconnection Customer in the Interconnection Application. The Area EPS Operator reserves the right to request additional technical information from the Interconnection Customer as may reasonably become necessary consistent with Good Utility Practice during the course of the System Impact Study.

4. A System Impact Study may, as necessary, consist of a short circuit analysis, a stability analysis, a power flow analysis, voltage drop and flicker studies, protection and set point coordination studies, and grounding reviews. A System Impact Study shall state the assumptions upon which it is based, state the results of the analyses, and provide the requirement or potential impediments to providing the requested interconnection service, including a preliminary indication of the cost and length of time that would be necessary to correct any problems identified in those analyses and implement the interconnection. A System Impact Study shall provide a list of facilities that are required as a result of the Interconnection Application and non-binding good faith estimates of cost responsibility and time to construct. A Facilities Study may be required to identify all possibilities of facility upgrades, cost estimates and estimate of construction time.

5. A distribution System Impact Study shall incorporate a distribution load flow study, an analysis of equipment interrupting ratings, protection coordination study, voltage drop and flicker studies, protection and set point coordination studies, grounding reviews, and the impact on electric system operation, as necessary.

6. If the System Impact Study determines Affected Systems may be affected, a separate Transmission System Impact Study may be required. All Affected Systems shall be

afforded an opportunity to review and comment upon a System Impact Study that indicates potential adverse system impacts on their electric systems.

7. If the Area EPS Operator uses a queuing procedure for sorting or prioritizing projects and their associated cost responsibilities for any required Network Upgrades, the System Impact Study shall consider all Distributed Energy Resources (and with respect to Section 7.3 below, any identified Upgrades associated with such higher queued interconnection) that, on the date the System Impact Study is commenced.

   7.1. Are directly interconnected with the Area EPS Operator's Electric System; or

   7.2. Are interconnected with Affected Systems and may have an impact on the proposed interconnection; and

   7.3. Have a pending higher queued Interconnection Application to interconnect with the Area EPS Operator's Electric System.

8. A deposit of the equivalent of the good faith estimated cost of a System Impact Study shall be required from the Interconnection Customer when the signed Agreement is provided to the Area EPS Operator.

9. Any study fees shall be based on the Area EPS Operator's actual costs and include a summary of professional time. An invoice shall be sent to the Interconnection Customer within twenty (20) Business Days after the study is completed and delivered.

10. The Interconnection Customer must pay any study costs that exceed the deposit without interest, within twenty (20) Business Days, on receipt of the invoice or resolution of any dispute. If the deposit exceeds the invoiced fees, the Area EPS

Operator shall refund such excess within twenty (20) Business Days of the invoice without interest.

11. Governing Law, Regulatory Authority, and Rules

The validity, interpretation and enforcement of this Agreement and each of its provisions, shall be governed by the laws of the State of Minnesota. This Agreement is subject to all Applicable Laws and Regulations. Each Party expressly reserves the right to seek changes in, appeal, or otherwise contest any laws, orders, or regulations of a Governmental Authority.

12. Amendment

The Parties may amend this Agreement by a written instrument duly executed by both Parties.

13. No Third-Party Beneficiaries

This Agreement is not intended to and does not create rights, remedies, or benefits of any character whatsoever in favor of any persons, corporations, associations, or entities other than the Parties, and the obligations herein assumed are solely for the use and benefit of the Parties, their successors in interest and where permitted, their assigns.

14. Waiver

14.1. The failure of a Party to this Agreement to insist, on any occasion, upon strict performance of any provision of this Agreement, will not be considered a waiver of any obligation, right, or duty of, or imposed upon, such Party.

14.2. Any waiver at any time by either Party of its rights with respect to this Agreement shall not be deemed a continuing waiver or a waiver with respect to any other failure to comply with any other obligation, right, duty of this Agreement. Termination or default of this Agreement for any reason by the

Interconnection Customer, shall not constitute a waiver of the Interconnection Customer's legal rights to obtain an interconnection from the Area EPS Operator. Any waiver of this Agreement shall, if requested, be provided in writing.

15. Multiple Counterparts

This Agreement may be executed in two or more counterparts, each of which is deemed an original but all constitute one and the same instrument.

16. No Partnership

This Agreement shall not be interpreted or construed to create an association, joint venture, agency relationship, or partnership between the Parties, or to impose any partnership obligation or partnership liability upon either Party. Neither Party shall have any right, power or authority to enter into any agreement or undertaking for, or act on behalf of, or to act as or be an agent or representative of, or to otherwise bind, the other Party.

17. Severability

If any provision or portion of this Agreement shall for any reason be held or adjudged to be invalid or illegal or unenforceable by any court of competent jurisdiction or other Governmental Authority, (1) such portion or provision shall be deemed separate and independent, (2) the Parties shall negotiate in good faith to restore, insofar as practicable, the benefits to each Party that were affected by such ruling, and (3) the remainder of this Agreement shall remain in full force and effect.

18. Subcontractors

18.1. Nothing in this Agreement shall prevent a Party from utilizing the services of any subcontractor as it deems appropriate to perform its obligations under this Agreement; provided, however, that each Party shall require its subcontractors to comply with all applicable terms and conditions of this Agreement, in

providing such services and each Party shall remain primarily liable to the other Party for the performance of such subcontractor.

18.2. The creation of any subcontract relationship shall not relieve the hiring Party of any of its obligations under this Agreement. The hiring Party shall be fully responsible to the other Party for the acts or omissions of any subcontractor the hiring Party hires, as if no subcontract had been made; provided, however, that in no event shall the Area EPS Operator be liable for the actions or inactions of the Interconnection Customer or thier subcontractors with respect to obligations of the Interconnection Customer under this Agreement. Any applicable obligation imposed by this Agreement, upon the hiring Party, shall be equally binding upon, and shall be construed as having application to, any subcontractor of such Party.

18.3. The obligations under this article will not be limited in any way by any limitation of subcontractor's insurance.

19. Inclusion of Area EPS Operator Tariffs and Rules

The interconnection services provided under this Agreement, shall at all times, be subject to the terms and conditions set forth in the tariff schedules and rules applicable to the electric service provided by the Area EPS Operator, which tariff schedules and rules are hereby incorporated into this Agreement by this reference. Notwithstanding any other provisions of this Agreement, the Area EPS Operator shall have the right to unilaterally change rates, charges, classification, service, tariff, or rule or any agreement relating thereto. The Interconnection Customer shall have the right to protest any such change through the Area EPS Operator's dispute resolution process, pursuant to the Area EPS Operator's rules and regulations.

IN WITNESS THEREOF, the Parties have caused this Agreement to be duly executed by their duly authorized officers or agents on the day and year first above written.

[Insert Name of Area EPS Operator]	[Insert Name of Interconnection Customer]
_____	_____
_____	_____
(Signature)	(Signature)
_____	_____
(Title)	(Title)

Attachment A

Assumptions Used in Conducting the System Impact Study

The System Impact Study shall be based upon the following assumptions:

1) Designation of Point of Common Coupling and configuration to be studied.

2) Designation of alternative Points of DER Interconnection and configuration.

1) and 2) are to be completed by the Interconnection Customer. Other assumptions (attached to this Agreement) are to be provided by the Interconnection Customer and the Area EPS Operator. The Area EPS Operator shall use the Reference Point for Applicability which is either the Point of Common Coupling or the Point(s) of DER Interconnection as described in IEEE 1547.

Additional DER Technical Data Required for System Impact Study

If applicable, the Area EPS Operator shall provide a list of any additional technical data that is required to adequately perform the System Impact Study. This list of required technical data shall be attached to this Agreement. As indicated in Section 4 of the Study Process document of the M-MIP, this information is to be returned with the signed System Impact Study Agreement and deposit.

Data to Be Provided by the Area EPS Operator with the System Impact Study Agreement

Estimate Cost of System Impact Study	$
Time duration to complete System Impact Study	Business Days

Minnesota Municipal Power Agency's 7 MW Buffalo Solar
Buffalo, MN

INTERCONNECTION PROCESS

Facility Study Agreement

ABSTRACT

Agreement outlining the scope, timeline and responsibility of cost for a proposed DER system's facility changes to the distribution system

Facilities Study Agreement

THIS AGREEMENT is made and entered into this _____day of_____ 20___ by and between_____, ("Interconnection Customer"), and ____Hawley Public Utilties__, a municipal utility existing under the laws of the State of Minnesota, ("Area EPS Operator"). Interconnection Customer and Area EPS Operator each may be referred to as a "Party," or collectively as the "Parties."

RECITALS

WHEREAS, the Interconnection Customer is proposing to develop a Distributed Energy Resource (DER) or generating capacity addition to an existing DER consistent with the Interconnection Application completed by the Interconnection Customer on_____(date); and

WHEREAS, the Interconnection Customer desires to interconnect the DER with the Area EPS Operator's Electric System;

WHEREAS, the Area EPS Operator has completed Initial Review, Supplemental Review, and/or a System Impact Study, and provided the results of said review to the Interconnection Customer, or determined none was required; and

WHEREAS, the Interconnection Customer has requested the Area EPS Operator to perform a Facilities Study(s) to specify, and estimate the cost of, the equipment, engineering, procurement and construction work, needed to implement the conclusions of the above noted review in accordance with Good Utility Practice, to physically and electrically connect the DER with the Area EPS Operator's distribution system.

NOW, THEREFORE, in consideration of, and subject to, the mutual covenants contained herein the Parties agreed as follows:

1. When used in this Agreement, with initial capitalization, the terms specified shall have the meanings indicated, or the meanings specified, in the Municipal Minnesota Distributed Energy Resources Interconnection Process (M-MIP).

2. The Interconnection Customer elects and the Area EPS Operator shall cause a Facilities Study consistent with the standard M-MIP to be performed. The scope of the Facilities Study shall be subject to data provided in Section 17 to this Agreement.

3. The Facilities Study shall specify and estimate the cost of the equipment, engineering, procurement and construction work (including overheads), needed to implement the conclusions of the System Impact Study(s). The Facilities Study shall also identify: 1) the electrical switching configuration of the equipment, including, without limitation, transformer, switchgear, meters, and other station equipment, 2) the nature and estimated cost of the Area EPS Operator's Interconnection Facilities and Upgrades, necessary to accomplish the interconnection, and 3) an estimate of the time required to complete the construction and installation of such facilities.

4. The Area EPS Operator may propose to group facilities required for more than one Interconnection Customer in order to minimize facilities costs through economies of scale. Any Interconnection Customer may require the installation of facilities required for its own Distributed Energy Resource, if they are willing to pay the costs of those facilities.

5. A deposit of the equivalent of the good faith estimated cost of a distribution Facility Study shall be required from the Interconnection Customer when the signed Agreement is provided to the Area EPS Operator.

6. Any study fees shall be based on the Area EPS Operator's actual costs and include a summary of professional time. An invoice shall be sent to the Interconnection Customer within twenty (20) Business Days after the study is completed and delivered.

7. The Interconnection Customer must pay any study costs that exceed the deposit without interest, within twenty (20) Business Days, on receipt of the invoice or resolution of any

dispute. If the deposit exceeds the invoiced fees, the Area EPS Operator shall refund such excess within twenty (20) Business Days of the invoice without interest.

8. Governing Law, Regulatory Authority, and Rules

The validity, interpretation and enforcement of this Agreement and each of its provisions, shall be governed by the laws of the State of Minnesota. This Agreement is subject to all Applicable Laws and Regulations. Each Party expressly reserves the right to seek changes in, appeal, or otherwise contest any laws, orders, or regulations of a Governmental Authority.

9. Amendment

The Parties may amend this Agreement by a written instrument duly executed by both Parties.

10. No Third-Party Beneficiaries

This Agreement is not intended to and does not create rights, remedies, or benefits of any character whatsoever in favor of any persons, corporations, associations, or entities other than the Parties, and the obligations herein assumed are solely for the use and benefit of the Parties, their successors in interest and where permitted, their assigns.

11. Waiver

11.1. The failure of a Party to this Agreement to insist, on any occasion, upon strict performance of any provision of this Agreement, will not be considered a waiver of any obligation, right, or duty of, or imposed upon, such Party.

11.2. Any waiver at any time by either Party of its rights with respect to this Agreement shall not be deemed a continuing waiver or a waiver with respect to any other failure to comply with any other obligation, right, duty of this Agreement. Termination or default of this Agreement for any reason by the Interconnection Customer, shall not constitute a waiver of the Interconnection Customer's legal rights to obtain an

interconnection from the Area EPS Operator. Any waiver of this Agreement shall, if requested, be provided in writing.

12. Multiple Counterparts

This Agreement may be executed in two or more counterparts, each of which is deemed an original but all constitute one and the same instrument.

13. No Partnership

This Agreement shall not be interpreted or construed to create an association, joint venture, agency relationship, or partnership between the Parties, or to impose any partnership obligation or partnership liability upon either Party. Neither Party shall have any right, power or authority to enter into any agreement or undertaking for, or act on behalf of, or to act as or be an agent or representative of, or to otherwise bind, the other Party.

14. Severability

If any provision or portion of this Agreement shall for any reason be held or adjudged to be invalid or illegal or unenforceable by any court of competent jurisdiction or other Governmental Authority, (1) such portion or provision shall be deemed separate and independent, (2) the Parties shall negotiate in good faith to restore, insofar as practicable, the benefits to each Party that were affected by such ruling, and (3) the remainder of this Agreement shall remain in full force and effect.

15. Subcontractors

15.1. Nothing in this Agreement shall prevent a Party from utilizing the services of any subcontractor as it deems appropriate to perform its obligations under this Agreement; provided, however, that each Party shall require its subcontractors to comply with all applicable terms and conditions of this Agreement, in providing such services and each Party shall remain primarily liable to the other Party for the performance of such subcontractor.

15.2. The creation of any subcontract relationship shall not relieve the hiring Party of any of its obligations under this Agreement. The hiring Party shall be fully responsible to the other Party for the acts or omissions of any subcontractor the hiring Party hires, as if no subcontract had been made; provided, however, that in no event shall the Area EPS Operator be liable for the actions or inactions of the Interconnection Customer or their subcontractors with respect to obligations of the Interconnection Customer under this Agreement. Any applicable obligation imposed by this Agreement, upon the hiring Party, shall be equally binding upon, and shall be construed as having application to, any subcontractor of such Party.

15.3. The obligations under this article will not be limited in any way by any limitation of subcontractor's insurance.

16. Inclusion of Area EPS Operator Tariffs and Rules

The interconnection services provided under this Agreement, shall at all times, be subject to the terms and conditions set forth in the tariff schedules and rules applicable to the electric service provided by the Area EPS Operator, which tariff schedules and rules are hereby incorporated into this Agreement by this reference. Notwithstanding any other provisions of this Agreement, the Area EPS Operator shall have the right to unilaterally change rates, charges, classification, service, tariff, or rule or any agreement relating thereto. The Interconnection Customer shall have the right to protest any such change through the Area EPS Operator's dispute resolution process, pursuant to the Area EPS Operator's rules and regulations.

17. Data to be Provide by Interconnection Customer with Facilities Agreement

17.1. The Interconnection Customer shall be available to meet on site with the Area EPS Operator within five (5) Business Days of signing the Facilities Study Agreement. The personnel furnished by the Interconnection Customer for this site visit shall bring

detailed information on the site layout. The Area EPS Operator may request the Interconnection Customer physically places stakes at the locations of major components.

17.2. The Interconnection Customer shall furnish a final site plan detailing the location of major equipment at the time this agreement is returned. The Point of Common Coupling (PCC) and Point of Distributed Resource Connection (PoC) shall be clearly marked. The site plan shall depict any nearby roads and be labeled with the road name. Accurate dimensions shall be included on the site plan. The proper emergency (911) address, corresponding to the site, shall be labeled on the site plan.

17.3. The Interconnection Customer shall furnish a final one-line diagram detailing the electrical connections between major components. The one-line shall be returned with the signed Facilities Study Agreement.

17.4. Technical cut sheets on all equipment related to metering shall be provided by the Interconnection Customer along with the signed Facilities Study Agreement.

17.5. If available, copies of the Conditional Use Permits(s) from all necessary authorities shall be returned by the Interconnection Customer with the signed Facilities Study Agreement.

17.6. The Interconnection Customer shall secure any necessary easements from private land owners prior to signing the Facilities Study Agreement. Documentation of any such agreements shall be provided to the Area EPS Operator.

17.7. In the event that the Area EPS Operator determines a site survey is necessary in order to complete a Facilities Study, the Interconnection Customer shall make good faith efforts to complete the survey in a timely manner.

17.8. The Facilities Study assumes all land use permits required for the interconnection will be approved by the proper authorities. Permits are submitted after Interconnection Agreement is signed and may impact project costs (i.e. overhead to underground requirements.)

17.9. The Interconnection Customer and Area EPS Operator shall provide a single point of contact for design and construction related matters. The Interconnection Customer single point of contact shall respond in a timely manner to the Area EPS Operator's questions during the Facilities Study.

17.10. In the event that an Interconnection Customer does not provide the necessary information described in this Agreement, or if the Interconnection Customer takes more than five (5) Business Days to respond to a question during the Facilities Study, the Facilities Study timeframe shall pause until the question is resolved.

IN WITNESS THEREOF, the Parties have caused this Agreement to be duly executed by their duly authorized officers or agents on the day and year first above written.

[Insert Name of Area EPS Operator]	[Insert Name of Interconnection Customer]
_____	_____
_____	_____
(Signature)	(Signature)
_____	_____
(Title)	(Title)

Data to Be Provided by the Area EPS Operator with the Facilities Study Agreement

Estimate Cost of Facility Study	$
Time duration to complete Facility Study	Business Days

Minnesota Municipal Power Agency Oak Glen Wind Turbine
Blooming Prairie, MN

INTERCONNECTION PROCESS

Transmission System Study Impact Agreement

ABSTRACT

Agreement outlining the scope, timeline and responsibility of cost for a proposed DER system's system impact to the transmission system

Transmission System Impact Study Agreement

THIS AGREEMENT is made and entered into this _____day of_____ 20___ by and between_____, ("Interconnection Customer"), and _____Hawley Public Utilities_____, a municipal utility existing under the laws of the State of Minnesota, ("Area EPS Operator"), and _____, a transmission system owner existing under the laws of the State of Minnesota, ("Transmission Provider"). Interconnection Customer, Area EPS Operator and Transmission Provider each may be referred to as a "Party," or collectively as the "Parties."

RECITALS

WHEREAS, the Interconnection Customer is proposing to develop a Distributed Energy Resource or generating capacity addition to an existing DER, (in either case referred to herein as a "DER"), interconnected to the Area EPS Operator's Electric System, as described in the Interconnection Application completed by the Interconnection Customer and submitted to the Area EPS Operator on_____; and

WHEREAS, the Interconnection Customer has requested the Area EPS Operator to work with the Transmission Provider to perform a Transmission System Impact Study to assess the impact on the Transmission Provider's electric transmission system of interconnecting the DER with the Area EPS Operator's Electric System, and to determine if there are potential Affected System(s) in addition to the Transmission Provider's electric transmission system;

NOW, THEREFORE, in consideration of, and subject to, the mutual covenants contained herein the Parties agreed as follows:

1. When used in this Agreement, with initial capitalization, the terms specified shall have the meanings indicated, or the meanings specified, in the Municipal Minnesota Distributed Energy Resources Interconnection Process (M-MIP).

2. The Interconnection Customer requests and the Area EPS Operator and its Transmission Provider agrees to perform a Transmission System Impact Study consistent with the M-MIP. The Interconnection Customer understands and acknowledges that each of the Area EPS Operator and the Transmission Provider may perform separate system impact studies. The scope of a Transmission System Impact Study shall be subject to the assumptions set forth in this Agreement; including Attachment A.

3. A Transmission System Impact Study will be based upon the technical information provided by Interconnection Customer in the Interconnection Application. Each of the Area EPS Operator and Transmission Provider reserve the right to request additional technical information from the Interconnection Customer as may reasonably become necessary consistent with Good Utility Practice during the course of the System Impact Study. Neither the Area EPS Operator nor the Transmission Provider will be obligated to commence the Transmission System Impact Study until each has received adequate technical information from the Interconnection Customer.

4. In the event that the applicable bulk transmission system generation interconnection process, (such as the Midcontinent Independent System Operator or MISO, or Southwest Power Pool or SPP), supersedes the M-MIP, the Transmission Provider will so notify the Interconnection Customer and this Agreement will be deemed terminated.

5. A Transmission System Impact Study may, as determined by the Area EPS Operator and/or the Transmission Provider, consist of a short circuit analysis, a stability analysis, a power flow analysis, voltage analysis and flicker studies, protection and set point coordination studies, and grounding reviews. A Transmission System Impact Study shall

state the assumptions upon which it is based, indicate the applicable Local Planning Criteria used, state the results of the analyses, and provide the requirement or potential impediments to providing the requested interconnection service, including a preliminary indication of the cost and length of time that would be necessary to correct any problems identified in those analyses and provide for the interconnection. A Transmission System Impact Study shall provide a list of transmission facilities that are required as a result of the Interconnection Application and non-binding good faith estimates of cost responsibility and time to construct such transmission facilities. A Facilities Study may be required to identify all possibilities of facility upgrades, cost estimates and estimate of construction time.

6. If the Transmission Provider determines there are any potential Affected System(s), the Affected System(s) will be asked to participate in or review/comment on the Transmission System Impact Study. The Affected System(s) will be entitled to determine in their sole discretion the extent of their participation or review/comment, and will be entitled to apply their respective Local Planning Criteria. The Transmission Provider will inform the Interconnection Customer of the estimated cost of the Affected System's participation in or review/comment on the Transmission System Impact Study.

7. The Transmission System Impact Study will be scheduled for completion taking in consideration for prior-queued projects in the applicable bulk transmission generation interconnection queue or Transmission Provider's generation interconnection queue. The Transmission Provider and/or the Area EPS Operator shall notify the Interconnection Customer if such condition exists.

8. The Area EPS Operator and/or the Transmission Provider shall provide an estimate of the cost of the Transmission System Impact Study to the Interconnection Customer. At the time that the Interconnection Customer executes this Agreement, the Interconnection Customer shall provide a deposit of the estimated cost(s) of the

Transmission System Impact Study to the Area EPS Operator and/or Transmission Provider, as applicable.

9. The Interconnection Customer shall be responsible for the actual costs incurred by the Area EPS Operator and/or the Transmission Provider to perform the Transmission System Impact Study. An invoice documenting the actual costs shall be sent by the Area EPS Operator and/or Transmission Provider to the Interconnection Customer within twenty (20) Business Days after the study is completed and delivered.

10. The Interconnection Customer shall pay the invoice amount less the deposit amount, within twenty (20) Business Days, on receipt of the invoice. If the deposit exceeds the actual cost of the study, the Transmission Provider shall refund such excess amount within twenty (20) Business Days of the date of the invoice.

11. Governing Law, Regulatory Authority, and Rules

The validity, interpretation and enforcement of this Agreement and each of its provisions, shall be governed by the laws of the State of Minnesota. This Agreement is subject to all Applicable Laws and Regulations. Each Party expressly reserves the right to seek changes in, appeal, or otherwise contest any laws, orders, or regulations of a Governmental Authority.

12. Amendment

The Parties may amend this Agreement by a written instrument duly executed by both Parties.

13. No Third-Party Beneficiaries

This Agreement is not intended to and does not create rights, remedies, or benefits of any character whatsoever in favor of any persons, corporations, associations, or entities

other than the Parties, and the obligations herein assumed are solely for the use and benefit of the Parties, their successors in interest and where permitted, their assigns.

14. Waiver

14.1. The failure of a Party to this Agreement to insist, on any occasion, upon strict performance of any provision of this Agreement, will not be considered a waiver of any obligation, right, or duty of, or imposed upon, such Party.

14.2. Any waiver at any time by either Party of its rights with respect to this Agreement shall not be deemed a continuing waiver or a waiver with respect to any other failure to comply with any other obligation, right, duty of this Agreement. Termination or default of this Agreement for any reason by the Interconnection Customer, shall not constitute a waiver of the Interconnection Customer's legal rights to obtain an interconnection from the Area EPS Operator. Any waiver of this Agreement shall, if requested, be provided in writing.

15. Multiple Counterparts

This Agreement may be executed in two or more counterparts, each of which is deemed an original but all constitute one and the same instrument.

16. No Partnership

This Agreement shall not be interpreted or construed to create an association, joint venture, agency relationship, or partnership between the Parties, or to impose any partnership obligation or partnership liability upon a Party. No Party shall have any right, power or authority to enter into any agreement or undertaking for, or act on behalf of, or to act as or be an agent or representative of, or to otherwise bind, any other Party.

17. Severability

If any provision or portion of this Agreement shall for any reason be held or adjudged to be invalid or illegal or unenforceable by any court of competent jurisdiction or other

Governmental Authority, (1) such portion or provision shall be deemed separate and independent, (2) the Parties shall negotiate in good faith to restore, insofar as practicable, the benefits to each Party that were affected by such ruling, and (3) the remainder of this Agreement shall remain in full force and effect.

18. Subcontractors

18.1. Nothing in this Agreement shall prevent a Party from utilizing the services of any subcontractor as it deems appropriate to perform its obligations under this Agreement; provided, however, that each Party shall require its subcontractors to comply with all applicable terms and conditions of this Agreement, in providing such services and each Party shall remain primarily liable to the other Party for the performance of such subcontractor.

18.2. The creation of any subcontract relationship shall not relieve the hiring Party of any of its obligations under this Agreement. The hiring Party shall be fully responsible to the other Parties for the acts or omissions of any subcontractor the hiring Party hires, as if no subcontract had been made; provided, however, that in no event shall the Area EPS Operator or the Transmission Provider be liable for the actions or inactions of the Interconnection Customer or its subcontractors with respect to obligations of the Interconnection Customer under this Agreement. Any applicable obligation imposed by this Agreement, upon the hiring Party, shall be equally binding upon, and shall be construed as having application to, any subcontractor of such Party.

18.3. The obligations under this article will not be limited in any way by any limitation of subcontractor's insurance.

19. Inclusion of Area EPS Operator Tariffs and Rules

The interconnection services provided under this Agreement, shall at all times, be subject to the terms and conditions set forth in the tariff schedules and rules applicable to the electric service provided by the Area EPS Operator, which tariff schedules and rules are hereby incorporated into this Agreement by this reference. Notwithstanding any other provisions of this Agreement, the Area EPS Operator shall have the right to unilaterally change rates, charges, classification, service, tariff, or rule or any agreement relating thereto. The Interconnection Customer shall have the right to protest any such change through the Area EPS Operator's dispute resolution process, pursuant to the Area EPS Operator's rules and regulations.

IN WITNESS THEREOF, the Parties have caused this Agreement to be duly executed by their duly authorized officers or agents on the day and year first above written.

[Insert Name of Area EPS Operator]

_____

_____

(Signature)

_____

(Title)

[Insert Name of Interconnection Customer]

_____

_____

(Signature)

_____

(Title)

[Insert Name of Transmission Provider]

_____

_____

(Signature)

_____

(Title)

Attachment A

Assumptions Used in Conducting the Transmission System Impact Study

The Transmission System Impact Study shall be based upon the following assumptions:

1) Designation of Point of Common Coupling and configuration to be studied.

2) Designation of alternative Points of DER Interconnection and configuration.

1) and 2) are to be completed by the Interconnection Customer. Other assumptions (listed below) are to be provided by the Interconnection Customer, the Area EPS Operator and the Transmission Provider. The Area EPS Operator and Transmission Provider shall use the Reference Point for Applicability which is either the Point of Common Coupling or the Point(s) of DER Interconnection as described in IEEE 1547.

Additional DER Technical Data Required for Transmission System Impact Study

If applicable, the Transmission Provider shall attach a list to this Agreement any additional technical data that is required to adequately perform the Transmission System Impact Study. As indicated in Section 4 of the Study Process document of the M-MIP, this information is to be returned with the signed Transmission System Impact Study Agreement and deposit.

Data to Be Provided by the Area EPS Operator and Transmission Provider with the Transmission System Impact Study Agreement

Estimate Cost of Transmission System Impact Study	$
Time duration to complete Transmission System Impact Study	Business Days

Minnesota Municipal Power Agency 5 kW Hometown Solar
Shakopee, MN

UNIFORM CONTRACT

ABSTRACT

Interconnection agreement for net energy billing DER systems or DER systems up to 100 kW that are compensated at avoided cost.

UNIFORM CONTRACT FOR COGENERATION AND SMALL POWER PRODUCTION FACILITIES

THIS CONTRACT is entered into _____, ___, by ___Hawley Public Utilities___, a municipal utility under Minnesota law, (hereafter called "Utility") and _____ (hereafter called "QF").

RECITALS

The QF has installed electric generating facilities, consisting of _____ _____ (Description of facilities), rated at ____kilowatts AC of electricity, on property located at _____ _____.

The QF is a customer of the Utility located within the assigned electric service territory of the Utility.

The QF is prepared to generate electricity in parallel with the Utility.

The QF's electric generating facilities meet the requirements of the rules adopted by the Utility on Cogeneration and Small Power Production and any technical standards for interconnection the Utility has established that are authorized by those rules.

The Utility is obligated under federal and Minnesota law to interconnect with the QF and to purchase electricity offered for sale by the QF.

A contract between the QF and the Utility is required.

AGREEMENTS

The QF and the Utility agree:

1. The Utility will sell electricity to the QF under the rate schedule in force for the class of customer to which the QF belongs.

2. The Utility will buy electricity from the QF under the current rate schedule filed with the city council or city-appointed governing body of the utility. The QF elects the rate schedule category hereinafter indicated:

____ a. Average retail utility energy rate.

- QF capacity must be less than 40 kW.

____ b. Simultaneous purchase and sale billing rate.

- QF capacity must be less than 40 kW.

____ c. Roll-over credits.

- QF capacity must be less than 40 kW.

____ d. Time-of-day purchase rates.

- QF capacity must be 40 kW or more and less than or equal to 100 kW.

A copy of the presently approved rate schedule is attached to this contract.

3. The rates for sales and purchases of electricity may change over the time this contract is in force, due to actions of the Utility or the State of Minnesota, and the QF and the Utility agree that sales and purchases will be made under the rates in effect each month during the time this contract is in force.

4. The Utility will compute the charges and payments for purchases and sales for each billing period. Any net credit to the QF, other than kilowatt-hour credits under clause 2(c), will be made under one of the following options as chosen by the QF.

____ a. Credit to the QF's account with the Utility.

____ b. Paid by check or electronic payment service to the QF within fifteen (15) days of the billing date.

5. Renewable energy credits associated with generation from the facility are owned by:

_____.

6. The QF must operate its electric generating facilities within any rules, regulations, and policies adopted by the Utility not prohibited by the rules governing Cogeneration and Small Power Production on the Utility's system which provide reasonable technical connection and operating specifications for the QF and are consistent with the Minnesota Public Utilities Commission's rules on Cogeneration and Small Power Production, as required under Minnesota Statutes §216B.164, subdivision 9.

7. The QF will not enter into an arrangement whereby electricity from the generating facilities will be sold to an end user in violation of the Utility's exclusive right to provide electric service in its service area under Minnesota Statutes, §216B.37-44.

8. The QF will operate its electric generating facilities so that they conform to the national, state, and local electric and safety codes, and will be responsible for the costs of conformance.

9. The QF is responsible for the actual, reasonable costs of interconnection which are estimated to be $_____. The QF will pay the Utility in this way:

_____

_____.

10. The QF will give the Utility reasonable access to its property and electric generating facilities if the configuration of those facilities does not permit disconnection or testing from the Utility 's side of the interconnection. If the Utility enters the QF's property, the Utility will remain responsible for its personnel.

11. The Utility may stop providing electricity to the QF during a system emergency. The Utility will not discriminate against the QF when it stops providing electricity or when it resumes providing electricity.

12. The Utility may stop purchasing electricity from the QF when necessary for the Utility to construct, install, maintain, repair, replace, remove, investigate, or inspect any equipment or facilities within its electric system. The Utility may stop purchasing electricity from the QF in the event the generating facilities listed in this contract are documented to be causing power quality, safety or reliability issues to the Utility's electric distribution system.

    The Utility will notify the QF before it stops purchasing electricity in this way:

    _____

    _____.

13. The QF will keep in force general liability insurance against personal or property damage due to the installation, interconnection, and operation of its electric generating facilities. The amount of insurance coverage will be $ _____. (The amount must be consistent with the distributed generation tariff adopted by the Utility pursuant to Minnesota Statutes §216B.1611, subdivision 3, clause 2.)

14. The QF and the Utility agree to attempt to resolve all disputes arising hereunder promptly and in a good faith manner.

15. The city council or city-appointed body governing the Utility has authority to consider and determine disputes, if any, that arise under this contract in accordance with procedures in the rules it adopts implementing Minnesota Statute §216B.164, pursuant to §216B.164, subdivision 9.

16. This contract becomes effective as soon as it is signed by the QF and the Utility. This contract will remain in force until either the QF or the Utility gives written notice to the other that the contract is canceled. This contract will be canceled thirty (30) days after notice is given. If the listed electric generating facilities are not

interconnected to the Utility's distribution system within twelve months of the contract being signed by the QF and the Utility, the contract terminates. The QF and the Utility may delay termination by mutual agreement.

17. Neither the QF nor the Utility will be considered in default as to any obligation if the QF or the Utility is prevented from fulfilling the obligation due to an act of God, labor disturbance, act of public enemy, war, insurrection, riot, fire, storm or flood, explosion, breakage or accident to machinery or equipment, an order, regulation or restriction imposed by governmental, military or lawfully established civilian authorities, or other cause beyond the QF's or Utility's control. However, the QF or Utility whose performance under this contract is hindered by such an event shall make all reasonable efforts to perform its obligations.

18. This contract can only be amended or modified by mutual agreement in writing signed by the QF and the Utility.

19. The QF must notify the Utility prior to any change in the electric generating facilities' capacity size or generating technology according to the interconnection process adopted by the Utility.

20. Termination of this contract is allowed (i) by the QF at any time without restriction; (ii) by Mutual Agreement between the Utility and the QF; (iii) upon abandonment or removal of electric generating facilities by the QF; (iv) by the Utility if the electric generating facilities are continuously non-operational for any twelve (12) consecutive month period; (v) by the Utility if the QF fails to comply with applicable interconnection design requirements or fails to remedy a violation of the interconnection process; or (vi) by the Utility upon breach of this contract by the QF unless cured with notice of cure received by the Utility prior to termination.

21. In the event this contract is terminated, the Utility shall have the rights to disconnect its facilities or direct the QF to disconnect its generating facilities.

22. This contract shall continue in effect after termination to the extent necessary to allow either the Utility or the QF to fulfill rights or obligations that arose under the contract.

23. Transfer of ownership of the generating facilities shall require the new owners and the Utility to execute a new contract. Upon the execution of a new contract with the new owners this contract shall be terminated.

24. The QF and the Utility shall at all times indemnify, defend, and save each other harmless from any and all damages, losses, claims, including claims and actions relating to injury or death of any person or damage to property, costs and expenses, reasonable attorneys' fees and court costs, arising out of or resulting from the QF's or the Utility's performance of its obligations under this contract,

except to the extent that such damages, losses or claims were caused by the negligence or intentional acts of the QF or the Utility.

25. The Utility and the QF will each be responsible for its own acts or omissions and the results thereof to the extent authorized by law and shall not be responsible for the acts or omissions of any others and the results thereof.

26. The QF's and the Utility's liability to each other for failure to perform its obligations under this contract shall be limited to the amount of direct damage actually occurred. In no event, shall the QF or the Utility be liable to each other for any punitive, incidental, indirect, special, or consequential damages of any kind whatsoever, including for loss of business opportunity or profits, regardless of whether such damages were foreseen.

27. The Utility does not give any warranty, expressed or implied, to the adequacy, safety, or other characteristics of the QF's interconnected system.

28. This contract contains all the agreements made between the QF and the Utility. The QF and Utility are not responsible other than those stated in this contract.

THE QF AND THE UTILITY HAVE READ THIS CONTRACT AND AGREE TO BE BOUND BY ITS TERMS. AS EVIDENCE OF THEIR AGREEMENT, THEY HAVE EACH SIGNED THIS CONTRACT BELOW ON THE DATE LISTED BY SIGNER.

QF

By: _____

Printed Name:_____

DATE: _____

UTILITY

By: _____

Printed Name:_____

DATE: _____

Contract Version: *February 2019*

Minnesota Municipal Power Agency's 7 MW Buffalo Solar
Buffalo, MN

INTERCONNECTION AGREEMENT

ABSTRACT

For use in lieu of the Utility's Uniform Contract

Contents

i. Contact Information 1

1 Scope and Limitations of Agreement 2

2 Responsibilities of the Parties 3

3 Parallel Operation Obligations 4

4 Metering 4

5 Distributed Energy Resource Capabilities and Grid Reliability 4

6 Equipment Testing and Inspection 5

7 Authorization Required Prior to Parallel Operation 5

8 Right of Access 5

9 Effective Date 6

10 Term of Agreement 6

11 Termination 6

12 Temporary Disconnection 6

13 Cost Responsibility for Interconnection Facilities and Distribution Upgrades 8

14 Cost Responsibility for Network Upgrades 9

15 Billing, Payment, Milestones, and Financial Security 11

16 Assignment, Force Majeure, Consequential Damages, and Default 12

17 Limitations of Liability 12

18 Non-Warranty 13

19 Indemnity 13

20 Consequential Damages 14

21 Force Majeure 14

22 Default 15

23 Insurance 15

24 Confidentiality 16

25 Disputes 17

26 Taxes 17

27 Miscellaneous 17

28 Notices 20

31 Signatures 24

Attachment I: Glossary of Terms 25

Attachment II: Description and Costs of the Distributed Energy Resource, Interconnection Facilities, and Metering Equipment 31

Attachment III: One-line Diagram Depicting the Distributed Energy Resource, Interconnection Facilities, and Metering Equipment, and Upgrades 32

Attachment IV: Milestones 33

Attachment V: Additional Operating and Maintenance Requirements for the Area EPS Operator's Distribution System and Affected Systems Need to Support the Interconnection Customer's Needs 35

Attachment VI: Area EPS Operator's Description of Distribution and Network Upgrades and Good Faith Estimates of Upgrade Costs 36

Attachment VII: Assignment of Interconnection Agreement 37

i. Contact Information

Contact information for each Party is listed below along with the basic information describing the Distributed Energy Resource (DER) system.

Area EPS Operator Information

Area EPS Operator: _____

Attention: _____

Address: _____

_____

Phone: _____

Email: _____

Interconnection Customer Information

Interconnection Customer: _____

Attention: _____

Address: _____

_____

Phone: _____

Email: _____

DER System Information

Application Number: _____

Type of DER System: _____

Capacity Rating of System (AC): _____

Limited Capacity Rating (AC): _____

Address of DER System: _____

_____

THIS AGREEMENT is made and entered into this _____day of_____ 20___ by and between_____, ("Interconnection Customer"), and ___Hawley Public Utilities_____, a municipal utility existing under the laws of the State of Minnesota, ("Area EPS Operator"). Interconnection Customer and Area EPS Operator each may be referred to as a "Party," or collectively as the "Parties."

In consideration of the mutual covenants set forth herein, the Parties agree as follows:

1 Scope and Limitations of Agreement

1.1. This Agreement is intended to provide for the Interconnection Customer to interconnect at the Point of Common Coupling and operate a Distributed Energy Resource with a Nameplate Rating of 10 Megawatts (MW) or less in parallel with the Area EPS at the location identified above and in the Interconnection Application.

1.2. This Agreement shall be used for all Interconnection Applications submitted under the Municipal Minnesota Distributed Energy Resources Interconnection Process (M-MIP) except for those Interconnection Applications that qualify and choose for the Uniform Contract to replace the need for this Agreement.

1.3. This Agreement governs the terms and conditions under which the Interconnection Customer's Distributed Energy Resource will interconnect with, and operate in parallel with, the Area EPS Operator's Distribution System.

1.4. Capitalized terms used herein shall have the meanings specified in the Glossary of Terms in Attachment 1, the M-MIP, or the body of this Agreement.

1.5. This Agreement does not constitute an agreement to purchase or deliver the Interconnection Customer's power. The purchase or delivery of power and other services that the Interconnection Customer may require will be covered under separate agreements, if any. The Interconnection Customer will be responsible for separately making all necessary arrangements (including scheduling) for delivery of electricity with the applicable Area EPS Operator.

1.6. Nothing in this Agreement is intended to affect any other agreement between the Area EPS Operator and the Interconnection Customer.

2 Responsibilities of the Parties

2.1. The Parties shall perform all obligations of this Agreement in accordance with the M-MIP, Minnesota Technical Requirements, all Applicable Laws and Regulations, Operating Requirements, and Good Utility Practice.

2.2. The Interconnection Customer shall construct, interconnect, operate and maintain its Distributed Energy Resource and construct, operate, and maintain its Interconnection Facilities in accordance with the applicable manufacturer's recommended maintenance schedule and, in accordance with this Agreement, and with Good Utility Practice.

2.3. The Area EPS Operator shall construct, operate, and maintain its Distribution System and its Interconnection Facilities in accordance with this Agreement, and with Good Utility Practice.

2.4. The Interconnection Customer agrees to construct its facilities or systems in accordance with the Minnesota Technical Requirements and this Agreement; including, applicable specifications that meet or exceed those provided by the National Electrical Safety Code, the American National Standards Institute, Institute of Electrical and Electronics Engineers (IEEE), Underwriter's Laboratory (UL), and Operating Requirements in effect at the time of construction and other applicable national and state codes and standards. The Interconnection Customer agrees to design, install, maintain, and operate its Distributed Energy Resource so as to reasonably minimize the likelihood of a disturbance adversely affecting or impairing the system or equipment of the Area EPS Operator and any Affected Systems.

2.5. Each Party shall operate, maintain, repair, and inspect, and shall be fully responsible for the facilities that it now owns or subsequently owns unless otherwise specified in the Attachments to this Agreement. Each Party shall be responsible for the safe installation, maintenance, repair and condition of their respective lines and appurtenances on their respective sides of the point of common coupling. The Area EPS Operator and the Interconnection Customer, as appropriate, shall provide Interconnection Facilities that adequately protect the Area EPS Operator's Distribution System, personnel, and other persons from damage and injury. The allocation of responsibility for the design, installation, operation, maintenance and ownership of Interconnection Facilities shall be delineated in the Attachments to this Agreement.

2.6. The Area EPS Operator shall coordinate with all Affected Systems to support the interconnection.

3 Parallel Operation Obligations

3.1. Once the Distributed Energy Resource has been authorized to commence parallel operation, the Interconnection Customer shall abide by all rules and procedures pertaining to the parallel operation of the Distributed Energy Resource in the applicable control area, including, but not limited to; 1) the rules and procedures concerning the operation of generation set forth by the applicable system operator(s) for the Area EPS Operator's Distribution System provided or referenced in an attachment to this Agreement and; 2) the Operating Requirements set forth in Attachment 5 of this Agreement. The Minnesota Technical Requirements for interconnection are covered in a separate document, a copy of which has been made available to the Interconnection Customer and incorporated and made part of this Agreement by this reference.

4 Metering

4.1. As described in M-MIP Overview Process Section 9.1, the Interconnection Customer shall be responsible for the Area EPS Operator's reasonable and necessary cost for the purchase, installation, operation, maintenance, testing, repair, and replacement of metering and data acquisition equipment specified in Attachments 2 and 3 of this Agreement. The Interconnection Customer's metering (and data acquisition, as required) equipment shall conform to applicable industry rules and Operating Requirements.

5 Distributed Energy Resource Capabilities and Grid Reliability

5.1. The Minnesota Technical Requirements outlines the Parties responsibilities consistent with IEEE 1547 Standard for Interconnection and Interoperability of Distributed Energy Resources with Associated Electric Power Systems Interfaces which provides requirements relevant to the interconnection and interoperability performance, operation and testing, and, to safety, maintenance and security considerations.

5.2. The Area EPS Operator may offer the Interconnection Customer the option to utilize required DER capabilities to mitigate Interconnection Customer costs related to Upgrades or Interconnection Facilities to address anticipated system impacts from the engineering review (i.e. Initial Review, Supplemental Review, or Study Process described in the M-MIP.)

6 Equipment Testing and Inspection

6.1. As described in M-MIP Overview Process Section 9.3, the Interconnection Customer shall test and inspect its Distributed Energy Resource and Interconnection Facilities prior to interconnection pursuant to Minnesota Technical Requirements and this Agreement.

7 Authorization Required Prior to Parallel Operation

7.1. As described in M-MIP Overview Process Section 9.5, the Area EPS Operator shall use Reasonable Efforts to list applicable parallel operation requirements by attaching the Minnesota Technical Requirements and/or including them in Attachment 5 to this Agreement. Additionally, the Area EPS Operator shall notify the Interconnection Customer of any changes to these requirements as soon as they are known. Pursuant to the M-MIP Overview Process Section 8.5, the Interconnection Customer shall not operate its Distributed Energy Resource in parallel with the Area EPS Operator's Distribution System without prior written authorization of the Area EPS Operator.

8 Right of Access

8.1. Upon reasonable notice, the Area EPS Operator may send a qualified person to the premises of the Interconnection Customer at or immediately before the time the Distributed Energy Resource first produces energy to inspect the interconnection, and observe the commissioning of the Distributed Energy Resource (including any required testing), startup, and operation for a period of up to three (3) Business Days after initial start-up of the unit. In addition, the Interconnection Customer shall notify the Area EPS Operator at least five (5) Business Days prior to conducting any on-site verification testing of the Distributed Energy Resource.

8.2. Following the initial inspection process described above, at reasonable hours, and upon reasonable notice, or at any time without notice in the event of an emergency or hazardous condition, the Area EPS Operator shall have access to the Interconnection Customer's premises for any reasonable purpose in connection with the performance of the obligations imposed on it by this Agreement or if necessary to meet its legal obligation to provide service to its customers.

8.3. Each Party shall be responsible for its costs associated with the interconnection of the DER system as outlined in M-MIP Overview Process Section 9.3 and the Minnesota Technical Requirements.

9 Effective Date

9.1 This Agreement shall become effective upon execution by the Parties.

10 Term of Agreement

10.1. This Agreement shall become effective on the Effective Date and shall remain in effect from the Effective Date unless terminated earlier in accordance with Section 11 of this Agreement.

11 Termination

11.1. No termination shall become effective until the Parties have complied with all Applicable Laws and Regulations applicable to such termination.

11.2. The Interconnection Customer may terminate this Agreement at any time by giving the Area EPS Operator twenty (20) Business Days written notice.

11.3. The Area EPS Operator may terminate this Agreement if the listed electric generating facilities are not interconnected to the Area EPS Operator's distribution system within thirty-six (36) months of this Agreement signed by the Parties. The Parties may choose to delay termination by mutual agreement.

11.4. Either Party may terminate this Agreement after Default pursuant to Section 3.

11.5. Upon termination of this Agreement, the Distributed Energy Resource will be disconnected from the Area EPS Operator's Distribution System. All costs required to effectuate such disconnection shall be borne by the terminating Party, unless such termination resulted from the non-terminating Party's Default of this Agreement or such non-terminating Party otherwise is responsible for these costs under this Agreement.

11.6. The termination of this Agreement shall not relieve either Party of its liabilities and obligations, owed or continuing at the time of the termination.

11.7. The provisions of this article shall survive termination or expiration of this Agreement.

12 Temporary Disconnection

12.1. Temporary disconnection shall continue only for so long as reasonably necessary under Good Utility Practice.

12.2. Emergency Conditions. Under emergency conditions, the Area EPS Operator may immediately suspend interconnection service and temporarily disconnect the Distributed Energy Resource. The Area EPS Operator shall use Reasonable Efforts to notify the Interconnection Customer promptly when it becomes aware of an Emergency Condition that may reasonably be expected to affect the Interconnection Customer's operation of the Distributed Energy Resource. The Interconnection Customer shall use Reasonable Efforts to notify the Area EPS Operator promptly when it becomes aware of an Emergency Condition that may reasonably be expected to affect the Area EPS Operator's Distribution System or any Affected Systems. To the extent information is known, the notification shall describe the Emergency Condition, the extent of the damage or deficiency, the expected effect on the operation of both Parties' facilities and operations, its anticipated duration, and the necessary corrective action.

12.3. Temporary Interruption. The Area EPS Operator may interrupt interconnection service or curtail the output of the Distributed Energy Resource and temporarily disconnect the Distributed Energy Resource from the Area EPS Operator's Distribution System when necessary for routine maintenance, construction, or repairs on the Area EPS Operator's Distribution System. The Area EPS Operator shall use Reasonable Efforts to provide the Interconnection Customer with three (3) Business Days' notice prior to such interruption. The Area EPS Operator shall use Reasonable Efforts to coordinate such reduction or temporary disconnection with the Interconnection Customer.

12.4. Forced Outage. During any forced outage, the Area EPS Operator may suspend interconnection service to effect immediate repairs on the Area EPS Operator's Distribution System. The Area EPS Operator shall use Reasonable Efforts to provide the Interconnection Customer with prior notice. If prior notice is not given, the Area EPS Operator shall, upon request, provide the Interconnection Customer written documentation after the fact explaining the circumstances of the disconnection.

12.5. Adverse Operating Effects. The Area EPS Operator shall notify the Interconnection Customer as soon as practicable if, based on Good Utility Practice, operation of the Distributed Energy Resource may cause disruption or deterioration of service to other customers served from the same electric system, or if operating the Distributed Energy Resource could cause damage to the Area EPS Operator's Distribution System or Affected Systems. Supporting documentation used to reach the decision to disconnect shall be provided to the Interconnection Customer upon request. If, after notice, the Interconnection Customer fails to remedy the adverse operating effect within a reasonable time, the Area EPS Operator may disconnect the Distributed Energy Resource. The Area EPS Operator shall provide the Interconnection Customer

with five Business Day notice of such disconnection, unless the provisions of Section 12.2 apply.

12.6. Modification of the Distributed Energy Resource. The Interconnection Customer must receive written authorization from the Area EPS Operator before making any change to the Distributed Energy Resource that may have a material impact on the safety or reliability of the Distribution System. Such authorization shall not be unreasonably withheld if the modification is not a Material Modification. Material Modifications, including an increase Nameplate Rating or capacity, may require the Interconnection Customer to submit a new Interconnection Application as described in the M-MIP Overview Process Section 7. If the Interconnection Customer makes such modification without the Area EPS Operator's prior written authorization, the latter shall have the right to temporarily disconnect the Distributed Energy Resource.

12.7. Reconnection. The Parties shall cooperate with each other to restore the Distributed Energy Resource, Interconnection Facilities, and the Area EPS Operator's Distribution System to their normal operating state as soon as reasonably practicable following a temporary disconnection.

12.8. Treatment Similar to Other Retail Customers. If the Interconnection Customer receives retail electrical service at the same site as the Distributed Energy Resource, it may also be disconnected consistent with the rules and practices for disconnecting other retail electrical customer.

12.9. Disconnection for Default. If the Interconnection Customer is in Default of this Agreement, it may be disconnected after a sixty (60) day written notice is provided and the Default is not cured during this sixty (60) day notice. This provision does not apply to disconnection based on Sections 12.2, 12.3, 12.4 or 12.5 of this Agreement.

13 Cost Responsibility for Interconnection Facilities and Distribution Upgrades

13.1 Interconnection Facilities. The Interconnection Customer shall pay for the cost of the Interconnection Facilities itemized in Attachment 2 of this Agreement. The Area EPS Operator shall provide a good faith estimate cost, including overheads, for the purchase and construction of its Interconnection Facilities and provide a detailed itemization of such costs. Costs associated with Interconnection Facilities may be shared with other entities that may benefit from such facilities by agreement of the Interconnection Customer, such other entities, and the Area EPS Operator.

13.2 The Interconnection Customer shall be responsible for its share of all reasonable expenses, including overheads, associated with (1) owning, operating, maintaining, repairing, and replacing its own Interconnection Facilities, and (2) operating, maintaining, repairing, and replacing the Area EPS Operator's Interconnection Facilities.

13.3 Distribution Upgrades. The Area EPS Operator shall design, procure, construct, install, and own the Distribution Upgrades described in Attachment 6 of this Agreement. The Area EPS Operator shall provide a good faith estimate cost, including overheads, for the purchase and construction of the Distribution Upgrades and provide a detailed itemization of such costs. If the Area EPS Operator and the Interconnection Customer agree, the Interconnection Customer may construct Distribution Upgrades that are located on land owned by the Interconnection Customer. The actual cost of the Distribution Upgrades, including overheads, shall be directly assigned to the Interconnection Customer.

14 Cost Responsibility for Network Upgrades

14.1. Applicability. No portion of Section 14 shall apply unless the interconnection of the Distributed Energy Resource requires Network Upgrades.

14.2. Network Upgrades. The Area EPS Operator or the Transmission Owner shall design, procure, construct, install, and own the Network Upgrades described in Attachment 6 of this Agreement. The Area EPS Operator shall provide a good faith estimate cost, including overheads, for the purchase and construction of the Network Upgrades and provide a detailed itemization of such costs. If the Area EPS Operator and the Interconnection Customer agree, the Interconnection Customer may construct Network Upgrades that are located on land owned by the Interconnection Customer. Unless the Area EPS Operator elects to pay for Network Upgrades, the actual cost of the Network Upgrades, including overheads, shall be borne initially by the Interconnection Customer.

14.3. Repayment of Amounts Advanced for Network Upgrades. The Interconnection Customer shall be entitled to a cash repayment, equal to the total amount paid to the Area EPS Operator and Affected System operator, if any, for Network Upgrades, including any tax gross-up or other tax-related payments associated with the Network Upgrades, and not otherwise refunded to the Interconnection Customer, to be paid to the Interconnection Customer on a dollar-for-dollar basis for the non-usage sensitive portion of transmission charges, as payments are made under the Area EPS Operator's Tariff and Affected System's Tariff for transmission services with respect to the Distributed Energy Resource. Any repayment shall include interest

calculated in accordance with the methodology set forth in Federal Energy Regulatory Commission's (FERC's) regulations at 18 C.F.R. § 35.19a(a)(2)(iii) from the date of any payment for Network Upgrades through the date on which the Interconnection Customer receives a repayment of such payment pursuant to this subparagraph. The Interconnection Customer may assign such repayment rights to any person.

14.4. Notwithstanding the foregoing, the Interconnection Customer, the Area EPS Operator, and any applicable Affected System operators may adopt any alternative payment schedule that is mutually agreeable so long as the Area EPS Operator and said Affected System operators take one of the following actions no later than five years from the Commercial Operation Date: (1) return to the Interconnection Customer any amounts advanced for Network Upgrades not previously repaid, or (2) declare in writing that the Area EPS Operator or any applicable Affected System operators will continue to provide payments to the Interconnection Customer on a dollar-for-dollar basis for the non-usage sensitive portion of transmission charges, or develop an alternative schedule that is mutually agreeable and provides for the return of all amounts advanced for Network Upgrades not previously repaid; however, full reimbursement shall not extend beyond 20 years from the commercial operation date.

14.5. If the Distributed Energy Resource fails to achieve commercial operation, but it or another Distributed Energy Resource is later constructed and requires use of the Network Upgrades, the Area EPS Operator and Affected System operator shall at that time reimburse the Interconnection Customer for the amounts advanced for the Network Upgrades. Before any such reimbursement can occur, the Interconnection Customer, or the entity that ultimately constructs the Distributed Energy Resource, if different, is responsible for identifying the entity to which reimbursement must be made.

14.6. Special Provisions for Affected Systems. Unless the Area EPS Operator provides, under this Agreement, for the repayment of amounts advanced to any applicable Affected System operators for Network Upgrades, the Interconnection Customer and Affected System operator shall enter into an agreement that provides for such repayment. The agreement shall specify the terms governing payments to be made by the Interconnection Customer to Affected System operator as well as the repayment by Affected System Operator.

14.7. Rights Under Other Agreements. Notwithstanding any other provision of this Agreement, nothing herein shall be construed as relinquishing or foreclosing any rights, including but not limited to firm transmission rights, capacity rights, transmission congestion rights, or transmission credits, that the Interconnection

Customer shall be entitled to, now or in the future, under any other agreement or tariff as a result of, or otherwise associated with, the transmission capacity, if any, created by the Network Upgrades, including the right to obtain cash reimbursements or transmission credits for transmission service that is not associated with the Distributed Energy Resource.

15 Billing, Payment, Milestones, and Financial Security

15.1. Billing and Payment Procedures and Final Accounting. The Area EPS Operator shall bill the Interconnection Customer for the design, engineering, construction, and procurement costs of Interconnection Facilities and Upgrades contemplated by this Agreement, and the Interconnection Customer shall pay each bill, pursuant to the M-MIP Interconnection Process documents, or as otherwise agreed to by the Parties.

15.2. Within 80 Business Days (approximately 4 calendar months) of completing the construction and installation of the Area EPS Operator's Interconnection Facilities and/or Upgrades described in the Attachments to this Agreement, the Area EPS Operator shall provide the Interconnection Customer with a final accounting report, as described in the M-MIP Fast Track Process Section 9.4.3 and the Study Process Section 11.4.3.

15.3. Milestones. Pursuant to the M-MIP Fast Track Process Section 9.1 and the Study Process Section 11.1, the Parties shall agree on milestones for which each Party is responsible and list them in Attachment 4 of this Agreement.

15.4. Financial Security Arrangements. Pursuant to the M-MIP Fast Track Process Section 9.5 and the Study Process Section 11.5, the Interconnection Customer shall provide the Area EPS Operator, at the Interconnection Customer's option, a guarantee, letter of credit or other form of security that is reasonably acceptable to the Area EPS Operator and is consistent with the Minnesota Uniform Commercial Code. Such security for payment shall be in an amount sufficient to cover the costs for constructing, designing, procuring, and installing the applicable portion of the Area EPS Operator's Interconnection Facilities and Upgrades and shall be reduced on a dollar-for-dollar basis for payments made to the Area EPS Operator under this Agreement during its term. In addition:

15.4.1. The guarantee must be made by an entity that meets the creditworthiness requirements of the Area EPS Operator, and contain terms and conditions that guarantee payment of any amount that may be due from the Interconnection Customer, up to an agreed-to maximum amount.

15.4.2. The letter of credit must be issued by a financial institution or insurer reasonably acceptable to the Area EPS Operator and must specify a reasonable expiration not sooner than sixty (60) Business Days (three calendar months) after the due date for the issuance of the final bill.

16 Assignment, Force Majeure, Consequential Damages, and Default

16.1. This Agreement may be assigned by either Party upon 15 Business Days prior written notice and opportunity to object by the other Party; provided that:

16.1.1. Either Party may assign this Agreement without the consent of the other Party to any affiliate of the assigning Party with an equal or greater credit rating and with the legal authority and operational ability to satisfy the obligations of the assigning Party under this Agreement, provided that the Interconnection Customer promptly notifies the Area EPS Operator of any such assignment.

16.1.2. Interconnection Customer shall have the right to assign this Agreement, without the consent of the Area EPS Operator, for collateral security purposes to aid in providing financing for the Distributed Energy Resource, provided that the Interconnection Customer will promptly notify the Area EPS Operator of any such assignment.

16.1.3. Any attempted assignment that violates this article is void and ineffective. Assignment shall not relieve a Party of its obligations, nor shall a Party's obligations be enlarged, in whole or in part, by reason thereof. An assignee is responsible for meeting the same financial, credit, and insurance obligations as the Interconnection Customer. Where required, consent to assignment will not be unreasonably withheld, conditioned or delayed.

17 Limitations of Liability

17.1. Each Party's liability to the other Party for any loss, cost, claim, injury, liability, or expense, including reasonable attorney's fees, relating to or arising from any act or omission in its performance of this Agreement, shall be limited to the amount of direct damage actually incurred. In no event shall either Party be liable to the other Party for any indirect, special, consequential, or punitive damages, except as authorized by this Agreement.

18 Non-Warranty

18.1. The Area EPS Operator does not give any warranty, expressed or implied, as to the adequacy, safety, or other characteristics of any structures, equipment, wires, appliances or devices owned, installed or maintained by the Interconnection Customer, including without limitation the Distributed Energy Resource and any structures, equipment, wires, appliances or devices not owned, operated or maintained by the Area EPS Operator.

19 Indemnity

19.1. This provision protects each Party from liability incurred to third parties as a result of carrying out the provisions of this Agreement. Liability under this provision is exempt from the general limitations on liability found in Section 17.

19.2. The Parties shall at all times indemnify, defend, and hold the other Party harmless from, any and all damages, losses, claims, including claims and actions relating to injury to or death of any person or damage to property, demand, suits, recoveries, costs and expenses, court costs, attorney fees, and all other obligations by or to third parties, arising out of or resulting from the other Party's action or failure to meet its obligations under this Agreement on behalf of the indemnifying Party, except in cases of gross negligence or intentional wrongdoing by the indemnified Party.

19.3. If an indemnified person is entitled to indemnification under this article as a result of a claim by a third party, and the indemnifying Party fails, after notice and reasonable opportunity to proceed under this article, to assume the defense of such claim, such indemnified person may at the expense of the indemnifying Party contest, settle or consent to the entry of any judgment with respect to, or pay in full, such claim.

19.4. If an indemnifying party is obligated to indemnify and hold any indemnified person harmless under this article, the amount owing to the indemnified person shall be the amount of such indemnified person's actual loss, net of any insurance or other recovery.

19.5. Promptly after receipt by an indemnified person of any claim or notice of the commencement of any action or administrative or legal proceeding or investigation as to which the indemnity provided for in this article may apply, the indemnified person shall notify the indemnifying party of such fact. Any failure of or delay in such notification shall not affect a Party's indemnification obligation unless such failure or delay is materially prejudicial to the indemnifying party.

19.6. This indemnification obligation shall apply notwithstanding any negligent or intentional acts, errors or omissions of the Indemnified Party, but the Indemnifying Party's liability to indemnify the Indemnifying Party shall be reduced in proportion to the percentage by which the Indemnified Party's negligent or intentional acts, errors or omissions caused damaged.

19.7. Neither Party shall be indemnified for its damages resulting from its sole negligence, intentional acts or willful misconduct. These indemnity provisions shall not be construed to relieve any insurer of its obligation to pay claims consistent with the provisions of a valid insurance policy.

20 Consequential Damages

20.1. Other than as expressly provided for in this Agreement, neither Party shall be liable under any provision of this Agreement for any losses, damages, costs or expenses for any special, indirect, incidental, consequential, or punitive damages, including but not limited to loss of profit or revenue, loss of the use of equipment, cost of capital, cost of temporary equipment or services, whether based in whole or in part in contract, in tort, including negligence, strict liability, or any other theory of liability; provided, however, that damages for which a Party may be liable to the other Party under another agreement will not be considered to be special, indirect, incidental, or consequential damages hereunder.

21 Force Majeure

21.1. If a Force Majeure Event prevents a Party from fulfilling any obligations under this Agreement, the Party affected by the Force Majeure Event (Affected Party) shall promptly notify the other Party, either in writing or via the telephone, of the existence of the Force Majeure Event. The notification must specify in reasonable detail the circumstances of the Force Majeure Event, its expected duration, and the steps that the Affected Party is taking to mitigate the effects of the event on its performance. The Affected Party shall keep the other Party informed on a continuing basis of developments relating to the Force Majeure Event until the event ends. The Affected Party will be entitled to suspend or modify its performance of obligations under this Agreement (other than the obligation to make payments) only to the extent that the effect of the Force Majeure Event cannot be mitigated by the use of Reasonable Efforts. The Affected Party will use Reasonable Efforts to resume its performance as soon as possible.

22 Default

22.1. No Default shall exist where such failure to discharge an obligation (other than the payment of money) is the result of a Force Majeure Event as defined in this Agreement or the result of an act or omission of the other Party. Upon a Default, the non-defaulting Party shall give written notice of such Default to the defaulting Party. Except as provided in Section 21, the defaulting Party shall have sixty (60) calendar days from receipt of the Default notice within which to cure such Default; provided however, if such Default is not capable of cure within sixty (60) calendar days, the defaulting Party shall commence such cure within twenty (20) calendar days after notice and continuously and diligently complete such cure within six (6) months from receipt of the Default notice; and, if cured within such time, the Default specified in such notice shall cease to exist.

22.2. If a Default is not cured as provided in this article, or if a Default is not capable of being cured within the period provided for herein, the non-defaulting Party shall have the right to terminate this Agreement by written notice at any time until cure occurs, and be relieved of any further obligation hereunder and, whether or not that Party terminates this Agreement, to recover from the defaulting Party all amounts due hereunder, plus all other damages and remedies to which it is entitled at law or in equity. The provisions of this article will survive termination of this Agreement.

23 Insurance

23.1. An Area EPS Operator may only require an Interconnection Customer to purchase insurance covering damages pursuant to the applicable M-MIP process document in which the distributed energy resource falls under.

23.2. The Area EPS Operator agrees to maintain general liability insurance or self-insurance consistent with the Area EPS Operator's commercial practice. Such insurance or self-insurance shall not exclude coverage for the Area EPS Operator's liabilities undertaken pursuant to this Agreement.

23.3. The Parties further agree to notify each other whenever an accident or incident occurs resulting in any injuries or damages that are included within the scope of coverage of such insurance, whether or not such coverage is sought.

23.4. Failure of the Interconnection Customer or Area EPS Operator to enforce the minimum levels of insurance does not relieve the Interconnection Customer from maintaining such levels of insurance or relieve the Interconnection Customer of any liability.

24 Confidentiality

24.1. Confidential Information shall mean any confidential and/or proprietary information provided by one Party to the other Party that is clearly marked or otherwise designated "Confidential." For purposes of this Agreement, design, operating specifications, and metering data provided by the Interconnection Customer may be deemed Confidential Information regardless of whether it is clearly marked or otherwise designated as such. If requested by either Party, the other Party shall provide in writing the basis for asserting that the information warrants confidential treatment. Parties providing a Governmental Authority trade secret, privileged or otherwise not public data under Minnesota Government Data Privacy Act, Minnesota Statutes Chapter 13, must provide information consistent with the Commission's September 1, 1999 Revised Procedures for Handling Trade Secret and Privileged Data.

24.2. Confidential Information does not include information previously in the public domain with proper authorization, required to be publicly submitted or divulged by Governmental Authorities (after notice to the other Party and after exhausting any opportunity to oppose such publication or release), or necessary to be publicly divulged in an action to enforce this Agreement. Each Party receiving Confidential Information shall hold such information in confidence and shall not disclose it to any third party nor to the public without the prior written authorization from the Party providing that information, except to fulfill obligations under this Agreement, or to fulfill legal or regulatory requirements that could not otherwise be fulfilled by not making the information public.

24.3. Each Party shall hold in confidence and shall not disclose Confidential Information, to any person (except employees, officers, representatives and agents, who agree to be bound by this section). Confidential Information shall be clearly marked as such on each page or otherwise affirmatively identified. If a court, government agency or entity with the right, power, and authority to do so, requests or requires either Party, by subpoena, oral disposition, interrogatories, requests for production of documents, administrative order, or otherwise, to disclose Confidential Information, that Party shall provide the other Party with prompt notice of such request(s) or requirements(s) so that the other Party may seek an appropriate protective order or waive compliance with the terms of this Agreement. In the absence of a protective order or waiver the Party shall disclose such confidential information which, in the opinion of its counsel, the party is legally compelled to disclose. Each Party will use reasonable efforts to obtain reliable assurance that confidential treatment will be accorded any confidential information so furnished.

24.4. Critical infrastructure information or information that is deemed or otherwise designated by a Party as Critical Energy/Electric Infrastructure Information (CEII) pursuant to FERC regulation 18 C.F.R. §388.133, as may be amended from time to time, may be subject to further protections for disclosure as required by FERC or FERC regulations or orders and the disclosing Party's CEII policies.

24.5. Each Party shall employ at least the same standard of care to protect Confidential Information obtained from the other Party as it employs to protect its own Confidential Information.

24.6. Each Party is entitled to equitable relief, by injunction or otherwise, to enforce its rights under this provision to prevent the release of Confidential Information without bond or proof of damages, and may seek other remedies available at law or in equity for breach of this provision.

25 Disputes

The Parties agree in a good faith effort to attempt to resolve all disputes arising out of the interconnection process and associated study and Interconnection Agreements. The Parties agree to follow the established dispute resolution policy adopted by the Area EPS Operator.

26 Taxes

26.1. The Parties agree to follow all applicable tax laws and regulations, consistent with Internal Revenue Service and any other relevant local, state and federal requirements.

26.2. Each Party shall cooperate with the other to maintain the other Party's tax status. It is incumbent on the Party seeking to maintain its tax status to provide formal written notice to the other Party detailing what exact cooperation it is seeking from the other Party well prior to any deadlines by which any such action would need to be taken. Nothing in this Agreement is intended to adversely affect, if applicable, the Area EPS Operator's tax-exempt status with respect to the issuance of bonds including, but not limited to, local furnishing bonds.

27 Miscellaneous

27.1. Governing Law, Regulatory Authority, and Rules. The validity, interpretation and enforcement of this Agreement and each of its provisions shall be governed by the Area EPS Operator's board of directors and the laws of the state of Minnesota, without regard to its conflicts of law principles. This Agreement is subject to all

Applicable Laws and Regulations. Each Party expressly reserves the right to seek changes in, appeal, or otherwise contest any laws, orders, or regulations of a Governmental Authority.

27.2. Amendment. The Parties may amend this Agreement by a written instrument duly executed by both Parties, or under Section 27.12 of this Agreement.

27.3. No Third-Party Beneficiaries. This Agreement is not intended to and does not create rights, remedies, or benefits of any character whatsoever in favor of any persons, corporations, associations, or entities other than the Parties, and the obligations herein assumed are solely for the use and benefit of the Parties, their successors in interest and where permitted, their assigns.

27.4. Waiver. The failure of a Party to this Agreement to insist, on any occasion, upon strict performance of any provision of this Agreement will not be considered a waiver of any obligation, right, or duty of, or imposed upon, such Party. Any waiver at any time by either Party of its rights with respect to this Agreement shall not be deemed a continuing waiver or a waiver with respect to any other failure to comply with any other obligation, right, duty of this Agreement. Termination or default of this Agreement for any reason by Interconnection Customer shall not constitute a waiver of the Interconnection Customer's legal rights to obtain an interconnection from the Area EPS Operator. Any waiver of this Agreement shall, if requested, be provided in writing.

27.5. Entire Agreement. This Agreement, including all Attachments, constitutes the entire agreement between the Parties with reference to the subject matter hereof, and supersedes all prior and contemporaneous understandings or agreements, oral or written, between the Parties with respect to the subject matter of this Agreement. There are no other agreements, representations, warranties, or covenants which constitute any part of the consideration for, or any condition to, either Party's compliance with its obligations under this Agreement. This Agreement can only be amended or modified in writing signed by both Parties.

27.6. Multiple Counterparts. This Agreement may be executed in two or more counterparts, each of which is deemed an original but all constitute one and the same instrument. Electronic signatures are acceptable if the Area EPS Operator has made such a determination pursuant to M-MIP Overview Process Section 4.1.

27.7. No Partnership. This Agreement shall not be interpreted or construed to create an association, joint venture, agency relationship, or partnership between the Parties or to impose any partnership obligation or partnership liability upon either Party.

Neither Party shall have any right, power or authority to enter into any agreement or undertaking for, or act on behalf of, or to act as or be an agent or representative of, or to otherwise bind, the other Party.

27.8. Severability. If any provision or portion of this Agreement shall for any reason be held or adjudged to be invalid or illegal or unenforceable by any court of competent jurisdiction or other Governmental Authority, (1) such portion or provision shall be deemed separate and independent, (2) the Parties shall negotiate in good faith to restore insofar as practicable the benefits to each Party that were affected by such ruling, and (3) the remainder of this Agreement shall remain in full force and effect.

27.9. Security Arrangements. Infrastructure security of electric system equipment and operations and control hardware and software is essential to ensure day-to-day reliability and operational security. All public utilities are expected to meet basic standards for system infrastructure and operational security, including physical, operational, and cyber-security practices.

27.10. Environmental Releases. Each Party shall notify the other Party, first orally and then in writing, of the release of any hazardous substances, any asbestos or lead abatement activities, or any type of remediation activities related to the Distributed Energy Resource or the Interconnection Facilities, each of which may reasonably be expected to affect the other Party. The notifying Party shall (1) provide the notice as soon as practicable, provided such Party makes a good faith effort to provide the notice no later than 24 hours after such Party becomes aware of the occurrence, and (2) promptly furnish to the other Party copies of any publicly available reports filed with any governmental authorities addressing such events.

27.11. Subcontractors. Nothing in this Agreement shall prevent a Party from utilizing the services of any subcontractor as it deems appropriate to perform its obligations under this Agreement. Each Party shall require its subcontractors to comply with all applicable terms and conditions of this Agreement in providing such services and each Party shall remain primarily liable to the other Party for the performance of such subcontractor.

27.11.1. The creation of any subcontract relationship shall not relieve the hiring Party of any of its obligations under this Agreement. The hiring Party shall be fully responsible to the other Party for the acts or omissions of any subcontractor the hiring Party hires as if no subcontract had been made. In no event shall the Area EPS Operator be liable for the actions or inactions of the Interconnection Customer or its subcontractors with respect to obligations of the Interconnection Customer under this

Agreement. Any applicable obligation imposed by this Agreement upon the hiring Party shall be equally binding upon, and shall be construed as having application to, any subcontractor of such Party.

27.11.2. The obligations under this article will not be limited in any way by any limitation of subcontractor's insurance.

27.12. Inclusion of Area EPS Operator Tariff and Rules. The interconnection services provided under this Agreement shall at all times be subject to the terms and conditions set forth in the rate schedules and rules applicable to the electric service provided by the Area EPS Operator, which rate schedules and rules are hereby incorporated into this Agreement by this reference.

28 Notices

28.1. General. Unless otherwise provided in this Agreement, any written notice, demand, or request required or authorized in connection with this Agreement ("Notice") shall be deemed properly given if delivered in person, delivered by recognized national currier service, or sent by first class mail, postage prepaid, to the person specified as follows:

Area EPS Operator Information

Area EPS Operator: _____

Attention: _____

Address: _____

_____

Phone: _____

Email: _____

Interconnection Customer Information

Interconnection Customer: _____

Attention: _____

Address: _____

_____

Phone: _____

Email: _____

28.2. Billing and Payment. Billing and payments shall be sent to the addresses set out below:

Area EPS Operator Information

Area EPS Operator: _____

Attention: _____

Address: _____

_____

Phone: _____

Email: _____

Interconnection Customer Information

Interconnection Customer: _____

Attention: _____

Address: _____

_____

Phone: _____

Email: _____

28.3. Alternative Forms of Notice. Any notice or request required or permitted to be given by either Party to the other and not required by this Agreement to be given in writing may be so given by telephone or e mail to the telephone numbers and e-mail addresses set out below:

Area EPS Operator Information

Area EPS Operator: _____

Attention: _____

Address: _____

_____

Phone: _____

Email: _____

Interconnection Customer Information

Interconnection Customer: _____

Attention: _____

Address: _____

_____

Phone: _____

Email: _____

28.4. Designated Operating Representative. The Parties may also designate operating representatives to conduct the communications which may be necessary or convenient for the administration of this Agreement. This person will also serve as the point of contact with respect to operations and maintenance of the Party's facilities.

Area EPS Operator Information

Area EPS Operator: _____

Attention: _____

Address: _____

_____

Phone: _____

Email: _____

Interconnection Customer Information

Interconnection Customer: _____

Attention: _____

Address: _____

_____

Phone: _____

Email: _____

28.5. Changes to Notification. Either Party may change this information by giving five Business Days written notice to the other Party prior to the effective date of the change.

31 Signatures

IN WITNESS THEREOF, the Parties have caused this Agreement to be duly executed by their duly authorized officers or agents on the day and year first above written.

[Insert name of Area EPS Operator]	[Insert name of Interconnection Customer]
_____	_____
Signed: _____	Signed: _____
Name (Printed):	Name (Printed):
_____	_____
Title: _____	Title: _____

Attachment I: Glossary of Terms

Affected System – Another Area EPS Operator's System, Transmission Owner's Transmission System, or Transmission System connected generation which may be affected by the proposed interconnection.

Applicant Agent – A person designated in writing by the Interconnection Customer to represent or provide information to the Area EPS on the Interconnection Customer's behalf throughout the interconnection process.

Area EPS – The electric power distribution system connected at the Point of Common Coupling.

Area EPS Operator – An entity that owns, controls, or operates the electric power distribution systems that are used for the provision of electric service in Minnesota. For this Interconnection Process the Area EPS Operator is Hawley Public Utilities.

Business Day – Monday through Friday, excluding Holidays as defined by Minn. Stat. §645.44, Subdivision 5. Any communication to have been sent or received after 4:30 p.m. Central Prevailing Time or on a Saturday, Sunday or holiday shall be considered to have been sent on the next Business Day.

Certified Equipment – Certified equipment is equipment that has been tested by a national recognized lab meeting a specific standard. For DER systems, UL 1741 listing is a common form of DER inverter certification. Additional information is seen in the Certification Codes and Standards document.

Confidential Information – Any confidential and/or proprietary information provided by one Party to the other Party and is clearly marked or otherwise designated "Confidential." All procedures, design, operating specifications, and metering data provided by the Interconnection Customer may be deemed Confidential Information. See Overview Process Section 12.1 for further information.

Distributed Energy Resource (DER) – A source of electric power that is not directly connected to a bulk power system or central station service. DER includes both generators and energy storage technologies capable of exporting active power to an EPS. An interconnection system or a supplemental DER device that is necessary for compliance with this standard is part of a DER. For the purpose of the Interconnection Process and interconnection agreements, the DER includes the Customer's Interconnection Facilities but shall not include the Area EPS Operator's Interconnection Facilities.

Distribution System – The Area EPS facilities which are not part of the Local EPS, Transmission System or any generation system.

Distribution Upgrades – The additions, modifications, and upgrades to the Distribution System at or beyond the Point of Common Coupling to facilitate interconnection of the DER and render the distribution service necessary to affect the Interconnection Customer's connection to the Distribution System. Distribution Upgrades do not include Interconnection Facilities.

Electric Power System (EPS) – The facilities that deliver electric power to a load.

Fast Track Process – The procedure as described in the Interconnection Process - Fast Track Process for evaluating an Interconnection Application for a DER that meets the eligibility requirements in the Overview Process Section 2.3.

Force Majeure Event – An act of God, labor disturbance, act of the public enemy, war, insurrection, riot, fire, storm or flood, explosion, breakage or accident to machinery or equipment, an order, regulation or restriction imposed by governmental, military or lawfully established civilian authorities, or another cause beyond a Party's control. A Force Majeure Event does not include an act of negligence or intentional wrongdoing.

Good Utility Practice – Any of the practices, methods and acts engaged in or approved by a significant portion of the electric industry during the relevant time period, or any of the practices, methods and act which, in the exercise of reasonable judgment in light of the facts known at the time the decision was made, could have been expected to accomplish the desired result at a reasonable cost consistent with good business practices, reliability, safety and expedition. Good Utility Practice is not intended to be limited to the optimum practice, method, or act to the exclusion of all others, but rather to be acceptable practices, methods, or acts generally accepted in the region.

Governmental Authority – Any federal, state, local or other governmental regulatory or administrative agency, court, commission, department, board, or other governmental subdivision, legislature, rulemaking board, tribunal, or other governmental authority having jurisdiction over the Parties, their respective facilities, or the respective services they provide, and exercising or entitled to exercise any administrative, executive, police, or taxing authority or power; provided, however, that such term does not include the Interconnection Customer, the Area EPS Operator, or any Affiliate thereof. The utility's local governing body is the authority governing interconnection requirements unless otherwise provided for in the Minnesota Technical Requirements.

Interconnection Agreement – The terms and conditions between the Area EPS Operator and Interconnection Customer (Parties). See Section 8 in the Overview Process**Error! Reference source not found.** for when the Uniform Contract or Interconnection Agreement applies.

Interconnection Application – The Interconnection Customer's request to interconnect a new or modified, as described in Section 4 of the Overview Process, DER. See Simplified Application Form and Interconnection Application Form.

Interconnection Customer – The person or entity, including the Area EPS Operator, whom will be the owner of the DER that proposes to interconnect a DER(s) with the Area EPS Operator's Distribution System. The Interconnection Customer is responsible for ensuring the DER(s) is designed, operated and maintained in compliance with the Minnesota Technical Requirements.

Interconnection Facilities – The Area EPS Operator's Interconnection Facilities and the Interconnection Customer's Interconnection Facilities. Collectively, Interconnection Facilities include all facilities and equipment between the DER and the Point of Common Coupling, including any modification, additions or upgrades that are necessary to physically and electrically interconnect the DER to the Area EPS Operator's System. Some examples of Customer Interconnection Facilities include: supplemental DER devices, inverters, and associated wiring and cables up to the Point of DER Connection. Some examples of Area EPS Operator Interconnection Facilities include sole use facilities; such as, line extensions, controls, relays, switches, breakers, transformers and shall not include Distribution Upgrades or Network Upgrades.

Interconnection Process – The Area EPS Operator's interconnection standards in this document.

Material Modification – A modification to machine data, equipment configuration or to the interconnection site of the DER at any time after receiving notification by the Area EPS Operator of a complete Interconnection Application that has a material impact on the cost, timing, or design of any Interconnection Facilities or Upgrades, or a material impact on the cost, timing or design of any Interconnection Application with a later Queue Position or the safety or reliability of the Area EPS.[1]

MN Technical Requirements – The term including all of the DER technical interconnection requirement documents for the state of Minnesota; including Attachment 2 Distributed Generation Interconnection Requirements established in the Commission's September 28, 2004 Order in E-999/CI-01-1023) until superseded and upon Commission approval of updated

[1] A Material Modification shall include, but may not be limited to, a modification from the approved Interconnection Application that: (1) changes the physical location of the point of common coupling; such that it is likely to have an impact on technical review; (2) increases the nameplate rating or output characteristics of the Distributed Energy Resource; (3) changes or replaces generating equipment, such as generator(s), inverter(s), transformers, relaying, controls, etc., and substitutes equipment that is not like-kind substitution in certification, size, ratings, impedances, efficiencies or capabilities of the equipment; (4) changes transformer connection(s) or grounding; and/or (5) changes to a certified inverter with different specifications or different inverter control settings or configuration. A Material Modification shall not include a modification from the approved Interconnection Application that: (1) changes the ownership of a Distributed Energy Resource; (2) changes the address of the Distributed Energy Resource, so long as the physical point of common coupling remains the same; (3) changes or replaces generating equipment such as generator(s), inverter(s), solar panel(s), transformers, relaying, controls, etc. and substitutes equipment that is a like-kind substitution in certification, size, ratings, impedances, efficiencies or capabilities of the equipment; and/or (4) increases the DC/AC ratio but does not increase the maximum AC output capability of the Distributed Energy Resource in a way that is likely to have an impact on technical review.

Minnesota DER Technical Interconnection and Interoperability Requirements in E-999/CI-16-521 (anticipated July 2019.)

Nameplate Rating - nominal voltage (V), current (A), maximum active power (kWac), apparent power (kVA), and reactive power (kVar) at which a DER is capable of sustained operation. For a Local EPS with multiple DER units, the aggregate nameplate rating is equal to the sum of all DERs nameplate rating in the Local EPS. For purposes of the Attachment V in the Interconnection Agreement, the DER system's capacity may, with the Area EPS's agreement, be limited thought use of control systems, power relays or similar device settings or adjustments as identified in IEEE 1547. The nameplate ratings referenced in the Interconnection Process are alternating current nameplate DER ratings at the Point of DER Coupling.

Network Upgrades – Additions, modifications, and upgrades to the Transmission System required at or beyond the point at which the DER interconnects with the Area EPS Operator's System to accommodate the interconnection with the DER to the Area EPS Operator's System. Network Upgrades do not include Distribution Upgrades.

Operating Requirements – Any operating and technical requirements that may be applicable due to the Transmission Provider's technical requirements or Minnesota Technical Requirements, including those set forth in the Interconnection Agreement.

Party or Parties – The Area EPS Operator and the Interconnection Customer.

Point of Common Coupling (PCC)– The point where the Interconnection Facilities connect with the Area EPS Operator's Distribution System. See figure 1. Equivalent, in most cases, to "service point" as specified by the Area EPS Operator and described in the National Electrical Code and the National Electrical Safety Code.

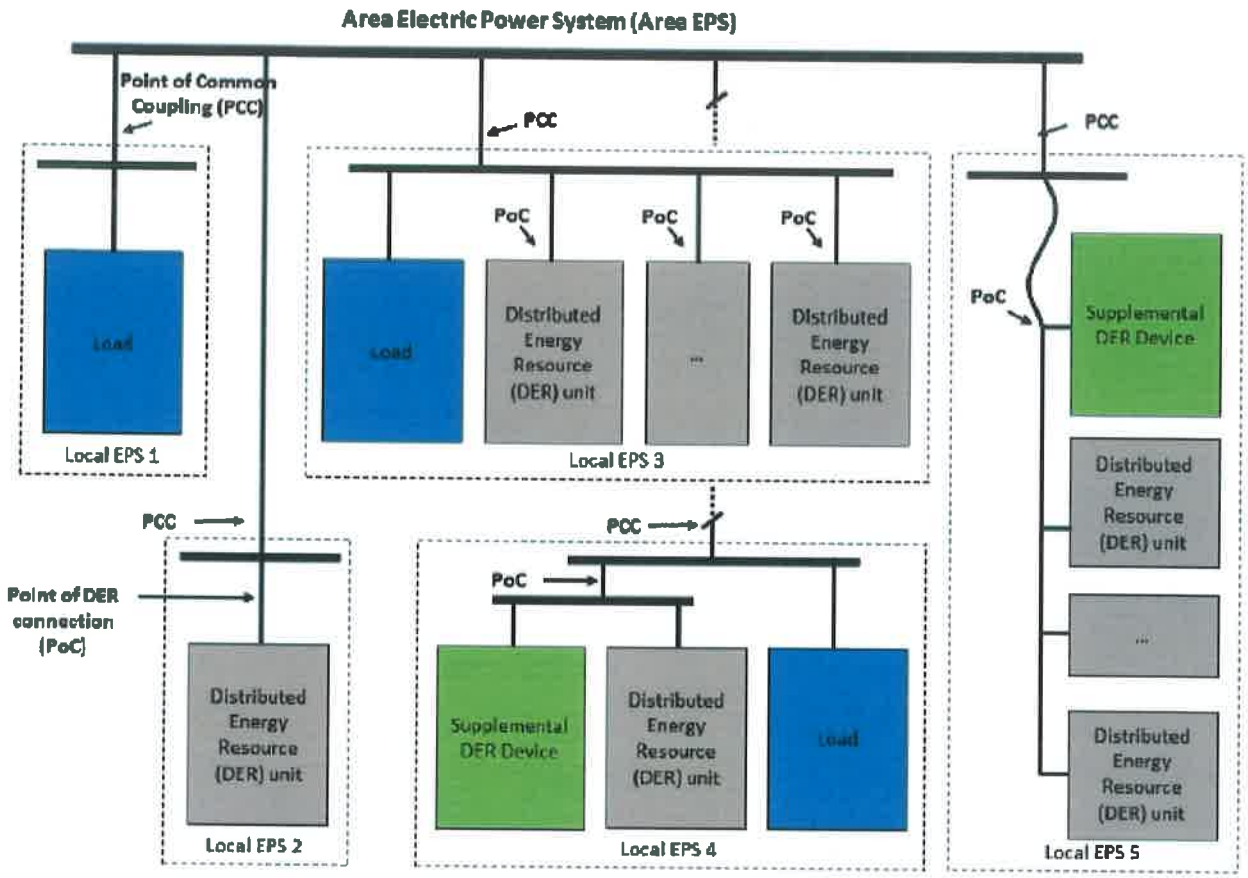

Figure 1: Point of Common Coupling and Point of DER Connection

(Source: IEEE 1547)

Point of DER Connection (PoC) – When identified as the Reference Point of Applicability, the point where an individual DER is electrically connected in a Local EPS and meets the requirements of this standard exclusive of any load present in the respective part of the Local EPS (e.g. terminals of the inverter when no supplemental DER device is required.) For DER unit(s) that are not self-sufficient to meet the requirements without a supplemental DER device(s), the Point of DER Connection is the point where the requirements of this standard are met by DER in conjunction with a supplemental DER device(s) exclusive of any load present in the respective part of the Local EPS.

Queue Position – The order of a valid Interconnection Application, relative to all other pending valid Interconnection Applications, that is established based upon the date- and time- of receipt of the complete Interconnection Application as described in Section 4.7 of the Overview Process**Error! Reference source not found.**.

Reasonable Efforts – With respect to an action required to be attempted or taken by a Party under these procedures, efforts that are timely and consistent with Good Utility Practice and are otherwise substantially equivalent to those a Party would use to protect its own interests.

Reference Point of Applicability – The location, either the Point of Common Coupling or the Point of DER Connection, where the interconnection and interoperability performance requirements specified in IEEE 1547 apply. With mutual agreement, the Area EPS Operator and Customer may determine a point between the Point of Common Coupling and Point of DER Connection. See Minnesota Technical Requirements for more information.

Simplified Process – The procedure for evaluating an Interconnection Application for a certified inverter-based DER no larger than 20 kW that uses the screens described in the Interconnection Process – Simplified Process document. The Simplified Process includes simplified procedures.

Study Process – The procedure for evaluating an Interconnection Application that includes the scoping meeting, system impact study, and facilities study.

Transmission Owner – The entity that owns, leases or otherwise possesses an interest in the portion of the Transmission System relevant to the Interconnection.

Transmission Provider – The entity (or its designated agent) that owns, leases, controls, or operates transmission facilities used for the transmission of electricity. The term Transmission Provider includes the Transmission Owner when the Transmission Owner is separate from the Transmission Provider. The Transmission Provider may include the Independent System Operator or Regional Transmission Operator.

Transmission System – The facilities owned, leased, controlled or operated by the Transmission Provider or the Transmission Owner that are used to provide transmission service. See the Commission's July 26, 2000 Order Adopting Boundary Guidelines for Distinguishing Transmission from Generation and Distribution Assets in Docket No. E-999/CI-99-1261.

Uniform Contract – the Area EPS Operator's Agreement for Cogeneration and Small Power Production Facilities (Uniform Contract) that may be applied to all qualifying new and existing interconnections between the Area EPS Operator and an DER system having capacity less than 40 kilowatts.

Upgrades – The required additions and modifications to the Area EPS Operator's Transmission or Distribution System at or beyond the Point of Interconnection. Upgrades may be Network Upgrades or Distribution Upgrades. Upgrades do not include Interconnection Facilities.

Attachment II: Description and Costs of the Distributed Energy Resource, Interconnection Facilities, and Metering Equipment

Equipment, including the Distribution Energy Resource, Interconnection Facilities, and metering equipment shall be itemized and identified as being owned by the Interconnection Customer or the Area EPS Operator. The Area EPS Operator will provide a good faith estimate itemized cost, including administrative overheads, of its Interconnection Facilities and metering equipment, and a good faith estimate itemized cost of the annual operation and maintenance expenses associated with the Interconnection Facilities and metering equipment.

Attachment III: One-line Diagram Depicting the Distributed Energy Resource, Interconnection Facilities, and Metering Equipment, and Upgrades

Attachment IV: Milestones

The Milestones in line (1) below may be a calendar date. All other dates in this Attachment IV may be the number of Business Days from the calendar date in line (1) or from the completion of a different Milestone described in a specific number line. Similarly, the anticipated In-Service Date may be based on the number of Business Days from the completion of a specified line number.

In-Service Date: _____

Critical milestones and responsibilities as agreed to by the Parties:

	Milestone/Anticipated Date	Responsible Party
(1)		
(2)		
(3)		
(4)		
(5)		
(6)		
(7)		
(8)		
(9)		
(10)		
(11)		
(12)		
(13)		

Agreed to by:

Area EPS Operator	_____	Date	_____
Transmission Owner (If Applicable)	_____	Date	_____
Interconnection Customer	_____	Date	_____

Attachment V: Additional Operating and Maintenance Requirements for the Area EPS Operator's Distribution System and Affected Systems Need to Support the Interconnection Customer's Needs

The Area EPS Operator shall also provide requirements that must be met by the Interconnection Customer prior to initiating parallel operation with the Area EPS Operator's Distribution System. Additional operating and maintenance requirements for an Affected System needed to support the Interconnection Customer's needs may be addressed in a separate agreement described in Section 14.6.

Attachment VI: Area EPS Operator's Description of Distribution and Network Upgrades and Good Faith Estimates of Upgrade Costs

The Area EPS Operator shall describe Distribution and Network Upgrades and provide an itemized good faith estimate of the costs, including administrative overheads, of the Upgrade and annual operations and maintenance expenses associated with such Upgrades. The Area EPS Operator shall functionalize Upgrade costs and annual expenses as either transmission or distribution related. Additional Distribution or Network Upgrades required for an Affected System may be addressed in a separate agreement as described in Section 14.6.

Attachment VII: Assignment of Interconnection Agreement

This is an Assignment of Interconnection Agreement ("Agreement").

There is an Interconnection Agreement, including any and all Attachments thereto including any and all amendments ("Agreement") by and between ___Hawley Public Utilities_____, a municipal utility existing under the laws of the State of Minnesota, ("Area EPS Operator"), and _____, ("Assignor") originally signed by the Area EPS Operator on _____ for a Distributed Energy Resource (DER) described as follows:

DER System Information

Type of DER System: _____

Capacity Rating of System (AC): _____

Limited Capacity Rating (AC): _____

Address of DER System: _____

_____

The Assignor intends to convey its interest in the above-referenced DER to _____ _____ ("Assignee"), and the Assignor intends to assign the Agreement to the Assignee.

Upon the execution of this Assignment by the Assignor, Assignee and the Area EPS Operator, agree as follows:

1. **Capitalized Terms**. Capitalized terms used but not defined herein shall have the meanings set forth in the Agreement.

2. **Consent to Assignment**. The Assignor hereby irrevocably assigns the Agreement in all respects to the Assignee and the Assignee accepts the assignment thereof in all respects.

3. **Amendment to Agreement**. The Area EPS Operator consents to this assignment and, as assigned, the Agreement is hereby amended so that wherever the name of the Assignor

is used therein it shall mean the Assignee. It is further agreed that all terms and conditions of the Agreement, as amended by this Assignment, shall remain in full force and effect.

4. **Payments by Area EPS Operator**. Any and all payments made by Area EPS Operator under the Agreement to either the Assignor or the Assignee shall be deemed to have been made to both and shall discharge the Area EPS Operator from any further liability with regard to said payment.

5. **Financial Obligations of Assignor and Assignee**. Any and all financial liability, including but not limited to amounts due, from the Interconnection Customer to the Area EPS Operator, occurring or accruing under the Agreement on or before the date of the signature of the Area EPS Operator to this Assignment shall be deemed to be the obligation of both the Assignor and Assignee, and the Area EPS Operator may recover any such amounts jointly and severally from the Assignor and Assignee.

6. **Contact information**. The following information updates and replaces the designated information as set forth on page 1 of the Agreement, and in Section 28.1, 28.2, 28.3 and 28.4 of the Agreement.

Page 1 Interconnection Customer Information

Interconnection Customer: _____

Attention: _____

Address: _____

_____

Phone: _____

Email: _____

28.1 General Notices. Interconnection Customer Information

Interconnection Customer: _____

Attention: _____

Address: _____

_____

Phone: _____

Email: _____

28.2 Billing and Payment Notices. Interconnection Customer Information

Interconnection Customer: _____

Attention: _____

Address: _____

_____

Phone: _____

Email: _____

28.3 Alternative Forms of Notices. Interconnection Customer Information

Interconnection Customer: _____

Attention: _____

Address: _____

_____

Phone: _____

Email: _____

28.4 Designated Operating Representative. Interconnection Customer Information

Interconnection Customer: _____

Attention: _____

Address: _____

_____

Phone: _____

Email: _____

7. **Signatures.** Facsimile or electronic signatures, or signatures to this Assignment sent electronically, shall have the same effect as original signatures. Photocopies, or electronically stored versions of this Assignment, shall have the same validity as the original.

The Area EPS Operator, Assignor, and Assignee have executed this Assignment as of the dates as set forth below.

Assignor

[Insert legal name of Assignor]

_____

Signed: _____

Name (Printed): _____

Title: _____

Date: _____

Assignee

[Insert legal name of Assignee]

_____

Signed: _____

Name (Printed): _____

Title: _____

Date: _____

Area EPS Operator

[Insert legal name of Area EPS Operator]

_____

Signed: _____

Name (Printed): _____

Title: _____

Date: _____

Certification of Completion

The Interconnection Customer should complete the Distributed Energy Resource Certification of Completion for a proposed DER interconnection in the Simplified Process Track. As a condition of interconnection, a completed copy of this form must be returned to the Utility.

Distributed Energy Resource Information		
Interconnection Customer:		
DER Project Address:		
City:	State:	Zip Code:
Application ID:	Meter Number:	
Is the DER system owner-installed?	☐ Yes ☐ No (If no please completed Installer Information)	

Installer Information	
Contact Name:	
Name of Business:	
Email:	Phone:
Electrician Name	License #

Electrical Permitting Authority	
The DER has been installed and inspected in compliance with the local electrical permitting authority as verified by the signature below or the additionally attached document.	
Inspector Signature:	Date:
Inspector Name:	Authority Having Jurisdiction (city/county):

*****Please print clearly or type and return completed along with any additional documentation*****

For Office Use Only
Date Received: